KONCEPT

contemporary LED lighting

MEET THE DESIGNERS

Koncept was born when Peter Ng and his two sons, Kenneth Ng and Edmund Ng, joined forces in 2002 in order to harness years of manufacturing and industrial design experience.

Since then, the family-operated team continues to employ a multidisciplinary approach to design by embracing modern, minimalist lines while maintaining rich functionalities, thus striking the perfect balance between form and function. Together, they designed one of the first practical LED desk lamps on the market- Koncept's signature Z-Bar light, which was selected into the permanent collection of Die Neue Sammlung, the state museum for design and applied arts in Munich, Germany.

The team at Koncept has designed a range of award-winning products which has significantly influenced by pioneering in the LED task lighting design industry. Their works have been featured in major press such as TIME Magazine, Oprah Magazine, and Interior Design Magazine, etc. To date, their designs have won 37 international design awards including the Red Dot Design Award, "The Best Inventions Of The Year" by Time Magazine, iF Design Award, and the Good Design Award.

KONCEPT

equo

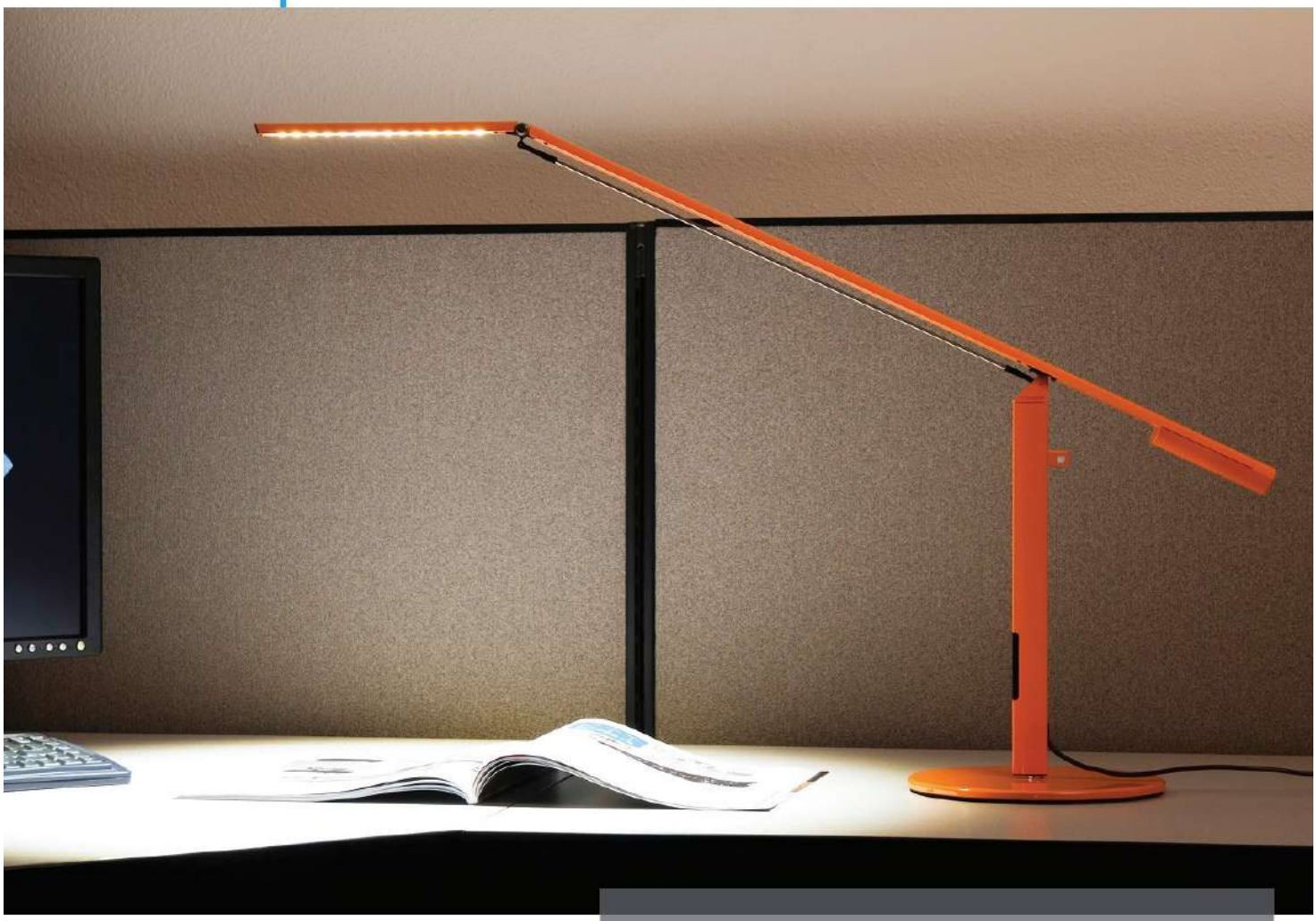

The exceptional Equo is a willowy sculpture masquerading as an LED desk lamp. The lamp has a streamlined counterweight design that balances the body of the lamp on a slight stand and weighted base while the LED head tilts and maintain its angle until you change it. Equo is a must-see lamp – see it for yourself to appreciate its unique and elegant design and functionality.

iF product design award 2012
WAN Awards Shortlisted 2012
Interior Design's Best of Year 2011 Product
JDP's Good Design Award 2011
Benelux Office Products Awards Winner 2011
Bloom Award Winner 2011
red dot: product design winner 2011
Next Generation Luminaires "Best in Class" Winner 2010
Spark Award – Bronze 2010
Chicago Athenaeum's GOOD DESIGN Award 2010
ADEX Platinum Award 2010

Designer
Peter Ng, Kenneth Ng & Edmund Ng

Lumens:	360
Energy Consumption:	6 watts
Number of LEDs:	28 LEDs
LED Rated Lifespan:	50,000 hours
Color Temperature (Typical) – Cool:	4,500 K
Color Temperature (Typical) – Warm:	3,500 K
Color Rendering Index (CRI):	85
Dimmer:	Built-in touchstrip
Brightness Adjustability:	Multiple dimming levels
Standard Color Finish*:	Chrome**, Black, Silver, Orange
Material:	Aluminum/Plastic
Cord Color:	Black
Cord Length:	10'
Transformer (100–240 V; 50/60 Hz):	Included – C-UL-US Certified

*Custom colors are available at additional cost. Contact Koncept or your sales representative for a quote.

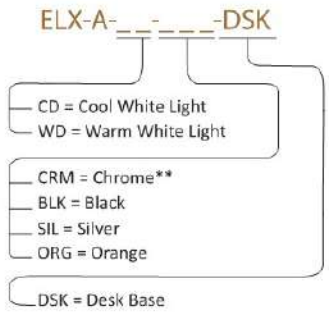

**CHROME FINISH ONLY COMES IN WARM LIGHT MODELS

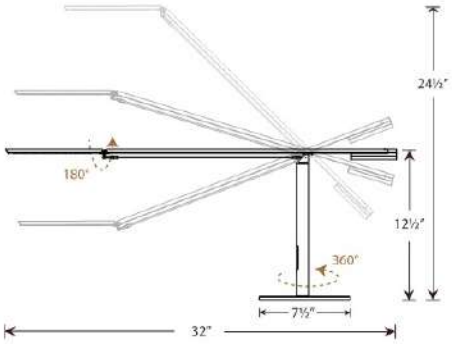

Occupancy sensor*
(P7-02-OCC01A)

*Sold separately

Potential LEED Points:

Energy & Atmosphere (EA)
Credit 1.1: Optimize Energy Performance
LED lighting to reduce energy consumption.
(Potential points: 3)

Innovation In Design (ID)
Credit 1.1- 1.4: Innovation in Design
EQUO incorporates a unique combination of features including feather-light adjustability with counterbalance mechanism, touch sensitive dimming, and constant angle joint stabilization.
(Potential points: 4)

Materials & Resources (MR)
Credit 4.1: Recycled Content - 10%
Lamps contain parts made out of 10% pre-consumer recycled content.
(Potential points: 1)
Credit 4.2: Recycled Content - 20%
Lamps contain parts made out of 20% pre-consumer recycled content.
(Potential points: 2)

Light source placed at 15" away from worksurface

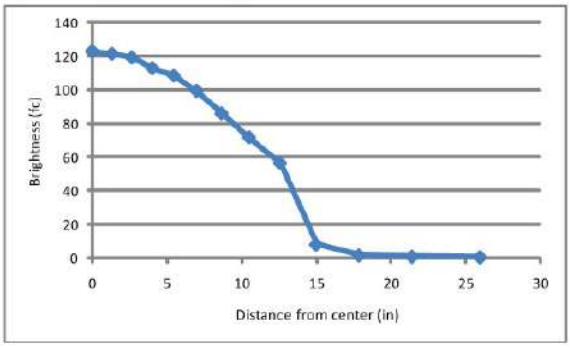

Lamp contains 34% preconsumer recycled material by weight*
Aluminum housing is fully recyclable
All color finishes use water-based paint

LEDs do not contain mercury

*in standard configuration (includes transformer and weighted base)

323 261 8999 | koncept.com | sales@koncept.com
429 E Huntington Dr. Monrovia, CA 91016

KONCEPT

KONCEPT
equo
FLOOR
Equo Floor Lamp brings the discreet counterweight design for feather-light adjustability without the need for a table. One finger is all you need to adjust the floating arm's position, and the tilting head stays at whatever angle you set when the arm is raised or lowered.
Designer
Peter Ng, Kenneth Ng & Edmund Ng

Lumens:	360
Energy Consumption:	6 watts
Number of LEDs:	28 LEDs
LED Rated Lifespan:	50,000 hours
Color Temperature (Typical) – Cool:	4,500 K
Color Temperature (Typical) – Warm:	3,500 K
Color Rendering Index (CRI):	85
Dimmer:	Built-in touchstrip
Brightness Adjustability:	Multiple dimming levels
Standard Color Finish*:	Chrome**, Black, Silver, Orange
Material:	Aluminum/Plastic
Cord Color:	Black
Cord Length:	10'
Transformer (100–240 V; 50/60 Hz):	Included – C-UL-US Certified

*Custom colors are available at additional cost. Contact Koncept or your sales representative for a quote.

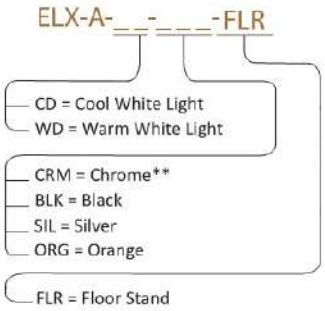

**CHROME FINISH ONLY COMES IN WARM LIGHT MODELS

Light source placed at 15" away from worksurface

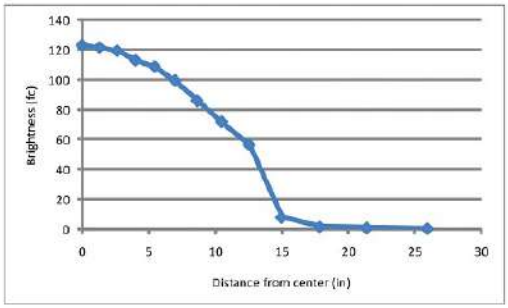

Horizontal and vertical reach

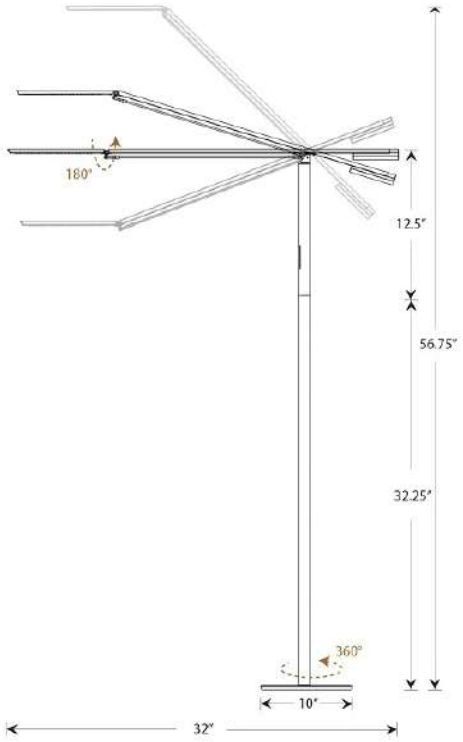

Potential LEED Points:

Energy & Atmosphere (EA)
Credit 1.1: Optimize Energy Performance
LED lighting to reduce energy consumption.
(Potential points: 3)

Innovation In Design (ID)
Credit 1.1- 1.4: Innovation in Design
EQUO Floor incorporates a unique combination of features including feather-light adjustability with counterbalance mechanism, touch sensitive dimming, and constant angle joint stabilization.
(Potential points: 4)

Materials & Resources (MR)
Credit 4.1: Recycled Content - 10%
Lamps contain parts made out of 10% pre-consumer recycled content.
(Potential points: 1)
Credit 4.2: Recycled Content - 20%
Lamps contain parts made out of 20% pre-consumer recycled content.
(Potential points: 2)

Lamp contains 35% preconsumer recycled material by weight*
Aluminum housing is fully recyclable
All color finishes use water-based paint
LEDs do not contain mercury

In standard configuration (includes transformer and weighted base)

Occupancy sensor**
(P7-02-OCC01A)

**Sold separately

323 261 8999 | koncept.com | sales@koncept.com
429 E Huntington Dr. Monrovia, CA 91016

KONCEPT

KONCEPT

Z-BAR

"Best of Category" in I.D. Magazine's 2006 Annual Design Review
Permanent collection at Die Neue Sammlung, Munich
TIME Magazine's "Best Inventions Of The Year" 2007

Designer
Peter Ng

The Z-Bar collection broke the mold for desk and floor lamp design and introduced the world to Koncept's contemporary stylings. Our designers tossed away the bulb-and-shade for a flexible, streamlined design that contained LEDs and three simple bars. Add intuitive on/off functionality with a dimming option and the rest, as they say, is history. With several sizes to choose from, there's a Z-Bar for every need.

Lumens:	475
Energy Consumption:	9.5 watts
Number of LEDs:	42 LEDs
LED Rated Lifespan:	50,000 hours
Color Temperature (Typical) – Cool:	4,500 K
Color Temperature (Typical) – Warm:	3,500 K
Color Rendering Index (CRI):	85
Dimmer:	Built-in touchstrip
Brightness Adjustability:	Multiple dimming levels
Standard Color Finish*:	Metallic Black, Silver
Material:	Aluminum/Plastic
Cord Color:	Black
Cord Length:	10'
Transformer (100–240 V; 50/60 Hz):	Included – C-UL-US Certified
Maximum Brightness** (15" above desk):	165 fc

*Custom colors are available at additional cost. Contact Koncept or your sales representative for a quote.
**Maximum brightness is measured on diffused models.

AR3000-__-___-___

- CD = Cool White Light
- WD = Warm White Light
- MBK = Metallic Black
- SIL = Silver
- DSK = Desk Base
- CLP = Clamp (One-Piece)
- 2CL = Two-Piece Clamp
- SLT = Slatwall Mount
- WAL = Wall Mount
- GRM = Grommet Mount
- THR = Through-Table Mount

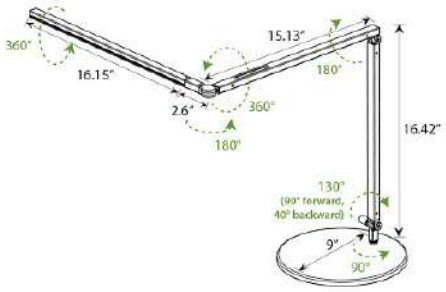

Desk base (MT-02-D001) | Slatwall mount (MT-01-S004) | Wall mount (MT01W1) | Grommet mount (MT-01-G001)

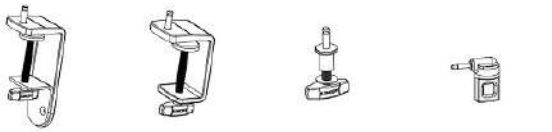

Two-piece clamp (MT-01-C004) | Clamp (one-piece) (MT01C3) | Through-table mount (MT01T1) | Occupancy sensor* (P7-01-OCC01A)

*Sold separately

Potential LEED Points:

Energy & Atmosphere (EA)

Credit 1.1: Optimize Energy Performance
LED lighting to reduce energy consumption.
(Potential points: 3)

Innovation In Design (ID)

Credit 1.1- 1.4: Innovation in Design
Z-Bar features the original three-bar design for maximum reach and flexibility. The LED head can spin in its socket, sweep side to side, and rotate around the end of the arm to point in any direction. The lamp also features a built-in touchstrip for brightness adjustability.
(Potential points: 4)

Materials & Resources (MR)

Credit 4.1: Recycled Content - 10%
Lamps contain parts made out of 10% pre-consumer recycled content.
(Potential points: 1)
Credit 4.2: Recycled Content - 20%
Lamps contain parts made out of 20% pre-consumer recycled content.
(Potential points: 2)

Light source placed at 15" away from worksurface

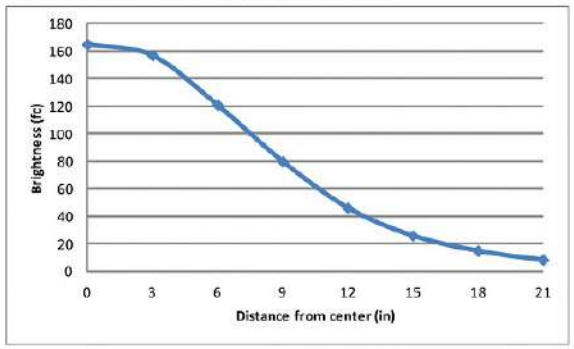

(Shown: photometrics of diffused light model)

Energy Star certified
Lamp contains 38% preconsumer recycled material by weight*
Aluminum housing is fully recyclable
All color finishes use water-based paint

LEDs do not contain mercury

In standard configuration (includes transformer and weighted base)

323 261 8999 | koncept.com | sales@koncept.com
429 E Huntington Dr. Monrovia, CA 91016

KONCEPT

KONCEPT

Z-BAR SLIM

When the classic Z-Bar is too big and the Z-Bar Mini is too small, Z-Bar Slim will be just right for your space. Modeled in the classic Z-Bar style, the slightly smaller. Slim is a midsize Z-Bar model that contains all of the great functionality of the classic Z-Bar.

Designer
Peter Ng

Lumens:	400
Energy Consumption:	8.5 watts
Number of LEDs:	35 LEDs
LED Rated Lifespan:	50,000 hours
Color Temperature (Typical) – Cool:	4,500 K
Color Temperature (Typical) – Warm:	3,500 K
Color Rendering Index (CRI):	85
Dimmer:	Built-in touchstrip
Brightness Adjustability:	Multiple dimming levels
Standard Color Finish*:	Metallic Black, Silver
Material:	Aluminum/Plastic
Cord Color:	Black
Cord Length:	10'
Transformer (100–240 V; 50/60 Hz):	Included – C-UL-US Certified

*Custom colors are available at additional cost. Contact Koncept or your sales representative for a quote.

AR3200-__-__-__

- CD = Cool White Light
- WD = Warm White Light

- MBK = Metallic Black
- SIL = Silver

- DSK = Desk Base
- CLP = Clamp (One-Piece)
- 2CL = Two-Piece Clamp
- SLT = Slatwall Mount
- WAL = Wall Mount
- GRM = Grommet Mount
- THR = Through-Table Mount

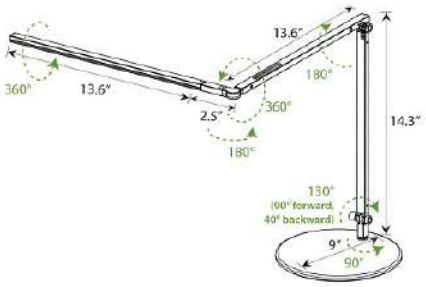

Desk base (MT-02-D001) | Slatwall mount (MT-01-S004) | Wall mount (MT01W1) | Grommet mount (MT-01-G001)

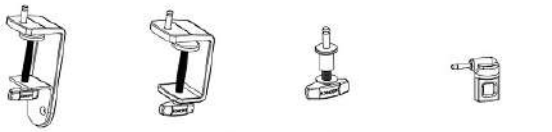

Two-piece clamp (MT-01-C004) | Clamp (one-piece) (MT01C3) | Through-table mount (MT01T1) | Occupancy sensor* (P7-01-OCC01A)

*Sold separately

Potential LEED Points:

Energy & Atmosphere (EA)

Credit 1.1: Optimize Energy Performance
LED lighting to reduce energy consumption.
(Potential points: 3)

Innovation In Design (ID)

Credit 1.1- 1.4: Innovation in Design
Z-Bar *Slim* features the original three-bar design for maximum reach and flexibility. The LED head can spin in its socket, sweep side to side, and rotate around the end of the arm to point in any direction. The lamp also features a built-in touchstrip for brightness adjustability.
(Potential points: 4)

Materials & Resources (MR)

Credit 4.1: Recycled Content - 10%
Lamps contain parts made out of 10% pre-consumer recycled content.
(Potential points: 1)
Credit 4.2: Recycled Content - 20%
Lamps contain parts made out of 20% pre-consumer recycled content.
(Potential points: 2)

Light source placed at 15" away from worksurface

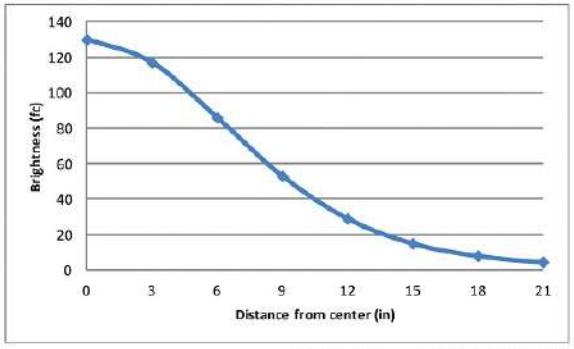

(Shown: photometrics of diffused light model)

Lamp contains 40% preconsumer recycled material by weight*
Aluminum housing is fully recyclable
All color finishes use water-based paint

LEDs do not contain mercury

**in standard configuration (includes transformer and weighted base)*

323 261 8999 | koncept.com | sales@koncept.com
429 E Huntington Dr. Monrovia, CA 91016

KONCEPT

KONCEPT

Z-BAR MINI

The Z-Bar Mini packs all of the style and features of its big brothers. This smaller version definitely delivers the same classic design, long reach and flexibility and multi-directional LED head. The only difference is, this Mini fits in a smaller space. Available in 8 different finishes.

Designer
Peter Ng

Lumens:	320
Energy Consumption:	6.5 watts
Number of LEDs:	28 LEDs
LED Rated Lifespan:	50,000 hours
Color Temperature (Typical) – Cool [1]:	4,500 K
Color Temperature (Typical) – Warm:	3,500 K
Color Rendering Index (CRI):	85
Dimmer:	Built-in touchstrip
Brightness Adjustability:	Multiple dimming levels
Standard Color Finish[2]:	Metallic Black, Silver, White, Red, Orange, Blue, Green, Purple
Material:	Aluminum/Plastic
Cord Color:	Black
Cord Length:	10'
Transformer (100–240 V; 50/60 Hz):	Included – C-UL-US Certified
Maximum Brightness[3] (15" above desk):	115

[1] Cool light is only offered with Metallic Black and Silver finishes.
[2] Custom colors are available at additional cost. Contact Koncept or your sales representative for a quote.
[3] Maximum brightness is measured on diffused models.

AR3100-__-___-___-___

- CD = Cool White Light
- WD= Warm White Light

- MBK = Metallic Black
- SIL = Silver
- WHT = White
- RED = Red
- ORG = Orange
- BLU = Blue
- GRN = Green
- PUR = Purple

- DSK = Desk Base
- CLP = Clamp (One-Piece)
- 2CL = Two-Piece Clamp
- SLT = Slatwall Mount
- WAL = Wall Mount
- GRM = Grommet Mount
- THR = Through-Table Mount

Z-BAR MINI IN BLACK AND SILVER ARE AVAILABLE IN COOL AND WARM.
ALL OTHER COLORS COME ONLY IN WARM.

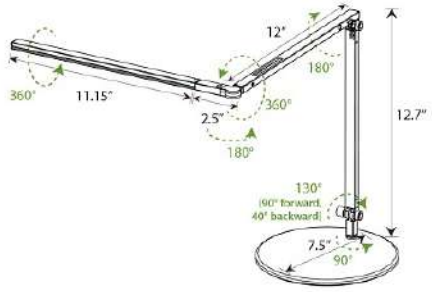

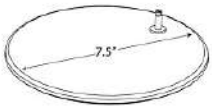

Desk base (MT-02-D002)

Slatwall mount (MT-01-S004)

Wall mount (MT01W1)

Grommet mount (MT-01-G001)

Two-piece clamp (MT-01-C004)

Clamp (one-piece) (MT01C3)

Through-table mount (MT01T1)

Occupancy sensor* (P7-01-OCC01A)

*Sold separately

Potential LEED Points:

Energy & Atmosphere (EA)
Credit 1.1: Optimize Energy Performance
LED lighting to reduce energy consumption.
(Potential points: 3)

Innovation In Design (ID)
Credit 1.1- 1.4: Innovation in Design
Z-Bar *Mini* features the original three-bar design for maximum reach and flexibility. The LED head can spin in its socket, sweep side to side, and rotate around the end of the arm to point in any direction. The lamp also features a built-in touchstrip for brightness adjustability.
(Potential points: 4)

Materials & Resources (MR)
Credit 4.1: Recycled Content - 10%
Lamps contain parts made out of 10% pre-consumer recycled content.
(Potential points: 1)
Credit 4.2: Recycled Content - 20%
Lamps contain parts made out of 20% pre-consumer recycled content.
(Potential points: 2)

Light source placed at 15" away from worksurface

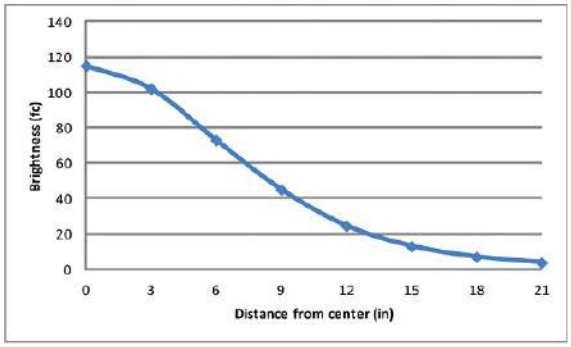

(Shown: photometrics of diffused light model)

Lamp contains 39% preconsumer recycled material by weight*
Aluminum housing is fully recyclable
All color finishes use water-based paint

LEDs do not contain mercury

**in standard configuration (includes transformer and weighted base)*

323 261 8999 | koncept.com | sales@koncept.com
429 E Huntington Dr. Monrovia, CA 91016

KONCEPT

KONCEPT

Z-BAR FLOOR

Designer
Peter Ng

Z-Bar Floor is an ultra thin and flexible floor lamp that fits any room and décor. Need ambient light? Turn the LED head to the ceiling. Need reading light? Pull the LED head down to sofa or chair level. Need no light at all? Fold the LED head against the body for a slim, sculptural silhouette.

Lumens:	475
Energy Consumption:	9.5 watts
Number of LEDs:	42 LEDs
LED Rated Lifespan:	50,000 hours
Color Temperature (Typical) – Cool:	4,500 K
Color Temperature (Typical) – Warm:	3,500 K
Color Rendering Index (CRI):	85
Dimmer:	Built-in touchstrip
Brightness Adjustability:	Multiple dimming levels
Standard Color Finish*:	Metallic Black, Silver
Material:	Aluminum/Plastic
Cord Color:	Black
Cord Length:	10'
Transformer (100–240 V; 50/60 Hz):	Included – C-UL-US Certified
Maximum Brightness** (15" above desk):	165 fc

*Custom colors are available at additional cost. Contact Koncept or your sales representative for a quote.
**Maximum brightness is measured on diffused models.

AR5000-__-___-FLR

- CD = Cool White Light
- WD = Warm White Light
- MBK = Metallic Black
- SIL = Silver
- FLR = Floor Stand

Light source placed at 15" away from worksurface

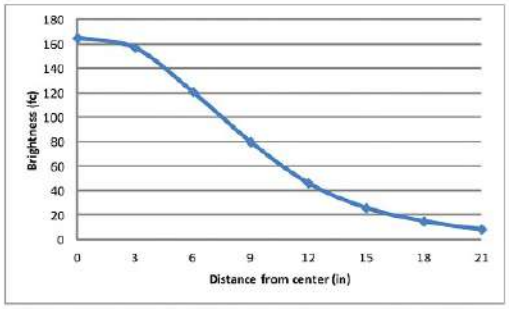

(Shown: photometrics of diffused light model)

Horizontal and vertical reach

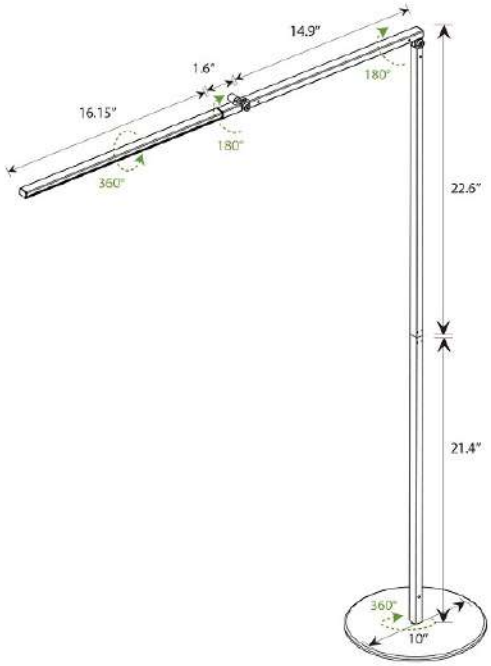

Potential LEED Points:

Energy & Atmosphere (EA)

Credit 1.1: Optimize Energy Performance
LED lighting to reduce energy consumption.
(Potential points: 3)

Innovation In Design (ID)

Credit 1.1- 1.4: Innovation in Design
Z-Bar Floor brings the original Z-Bar's three-bar design for maximum reach and flexibility without the need for a table. The LED head can spin in its socket, sweep side to side, and rotate around the end of the arm to point in any direction. The lamp also features a built-in touchstrip for touch sensitive dimming.
(Potential points: 4)

Materials & Resources (MR)

Credit 4.1: Recycled Content - 10%
Lamps contain parts made out of 10% pre-consumer recycled content.
(Potential points: 1)
Credit 4.2: Recycled Content - 20%
Lamps contain parts made out of 20% pre-consumer recycled content.
(Potential points: 2)

Energy Star certified
Lamp contains 37% preconsumer recycled material by weight*
Aluminum housing is fully recyclable
All color finishes use water-based paint

LEDs do not contain mercury

*in standard configuration (includes transformer and weighted base)

Occupancy sensor **
(P7-01-OCC01A)

**Sold separately

323 261 8999 | koncept.com | sales@koncept.com
429 E Huntington Dr. Monrovia, CA 91016

KONCEPT

KONCEPT

Z-BAR SOLO

As if the incredible Z-Bar design couldn't get any more minimalist, we present the Z-Bar Solo. Bring an even more compact LED lamp into your home or work space... and with all of the same features of the full-size Z-Bar lamp.

Designer
Peter Ng

Lumens:	400
Energy Consumption:	8.5 watts
Number of LEDs:	35 LEDs
LED Rated Lifespan:	50,000 hours
Color Temperature (Typical) – Cool:	4,500 K
Color Temperature (Typical) – Warm:	3,500 K
Color Rendering Index (CRI):	85
Dimmer:	Built-in touchstrip
Brightness Adjustability:	Multiple dimming levels
Standard Color Finish*:	Metallic Black, Silver
Material:	Aluminum/Plastic
Cord Color:	Black
Cord Length:	10'
Transformer (100–240 V; 50/60 Hz):	Included – C-UL-US Certified

*Custom colors are available at additional cost. Contact Koncept or your sales representative for a quote.

AR1000-__-__-__

- CD = Cool White Light
- WD= Warm White Light

- MBK = Metallic Black
- SIL = Silver

- DSK = Desk Base
- CLP = Clamp (One-Piece)
- 2CL = Two-Piece Clamp
- SLT = Slatwall Mount
- WAL = Wall Mount
- GRM = Grommet Mount
- THR = Through-Table Mount

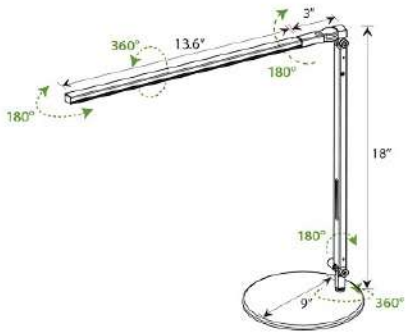

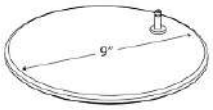

Desk base (MT-02-D001)

Slatwall mount (MT-01-S004)

Wall mount (MT01W1)

Grommet mount (MT-01-G001)

Two-piece clamp (MT-01-C004)

Clamp (one-piece) (MT01C3)

Through-table mount (MT01T1)

Occupancy sensor* (P7-01-OCC01A)

*Sold separately

Potential LEED Points:

Energy & Atmosphere (EA)
Credit 1.1: Optimize Energy Performance
LED lighting to reduce energy consumption.
(Potential points: 3)

Innovation In Design (ID)
Credit 1.1- 1.4: Innovation In Design
Z-Bar Solo uses a single arm for a more compact design with an LED head able to fold flat against the body. The lamp also features a built-in touchstrip for brightness adjustability.
(Potential points: 4)

Materials & Resources (MR)
Credit 4.1: Recycled Content - 10%
Lamps contain parts made out of 10% pre-consumer recycled content.
(Potential points: 1)
Credit 4.2: Recycled Content - 20%
Lamps contain parts made out of 20% pre-consumer recycled content.
(Potential points: 2)

Light source placed at 15" away from worksurface

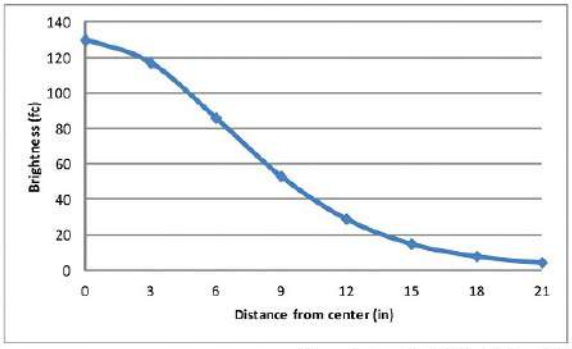

(Shown: photometrics of diffused light model)

Lamp contains 41% preconsumer recycled material by weight*
Aluminum housing is fully recyclable
All color finishes use water-based paint

LEDs do not contain mercury

**In standard configuration (includes transformer and weighted base)*

323 261 8999 | koncept.com | sales@koncept.com
429 E Huntington Dr, Monrovia, CA 91016

KONCEPT

Z-BAR SOLO MINI

If you thought our Z-Bar Solo was the smallest model in the family, think again. The Z-Bar Solo Mini may be the smallest by size, but the features are as plentiful as the other, larger models. You may be short on space, but it doesn't mean you have to sacrifice functionality.

Designer
Peter Ng

Lumens:	320
Energy Consumption:	6.5 watts
Number of LEDs:	28 LEDs
LED Rated Lifespan:	50,000 hours
Color Temperature (Typical) – Cool:	4,500 K
Color Temperature (Typical) – Warm:	3,500 K
Color Rendering Index (CRI):	85
Dimmer:	Built-in touchstrip
Brightness Adjustability:	Multiple dimming levels
Standard Color Finish*:	Metallic Black, Silver
Material:	Aluminum/Plastic
Cord Color:	Black
Cord Length:	10'
Transformer (100–240 V; 50/60 Hz):	Included – C-UL-US Certified
Maximum Brightness** (15" above desk):	115 fc

*Custom colors are available at additional cost. Contact Koncept or your sales representative for a quote.
**Maximum brightness is measured on diffused models.

AR1100-__-__-__

- CD= Cool White Light
- WD = Warm White Light
- MBK = Metallic Black
- SIL = Silver
- DSK = Desk Base
- CLP = Clamp (One-Piece)
- 2CL = Two-Piece Clamp
- SLT = Slatwall Mount
- WAL = Wall Mount
- GRM = Grommet Mount
- THR = Through-Table Mount

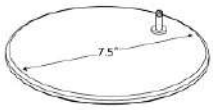

Desk base (MT-02-D002)

Slatwall mount (MT-01-S004)

Wall mount (MT01W1)

Grommet mount (MT-01-G001)

Two-piece clamp (MT-01-C004)

Clamp (one-piece) (MT01C3)

Through-table mount (MT01T1)

Occupancy sensor* (P7-01-OCC01A)

*Sold separately

Potential LEED Points:

Energy & Atmosphere (EA)
Credit 1.1: Optimize Energy Performance
LED lighting to reduce energy consumption.
(Potential points: 3)

Innovation In Design (ID)
Credit 1.1- 1.4: Innovation in Design
Z-Bar Solo *Mini* uses a single arm for a more compact design with an LED head able to fold flat against the body. The lamp also features a built-in touchstrip for brightness adjustability.
(Potential points: 4)

Materials & Resources (MR)
Credit 4.1: Recycled Content - 10%
Lamps contain parts made out of 10% pre-consumer recycled content.
(Potential points: 1)
Credit 4.2: Recycled Content - 20%
Lamps contain parts made out of 20% pre-consumer recycled content.
(Potential points: 2)

Light source placed at 15" away from worksurface

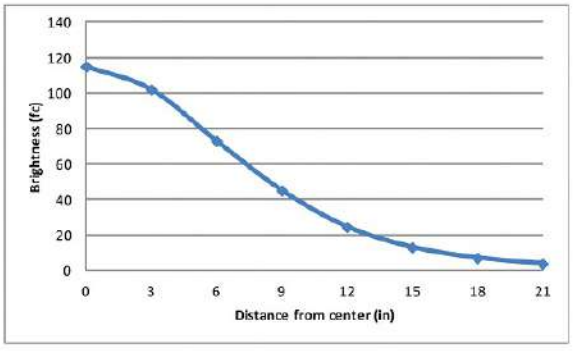

(Shown: photometrics of diffused light model)

Lamp contains 40% preconsumer recycled material by weight*
Aluminum housing is fully recyclable
All color finishes use water-based paint

LEDs do not contain mercury

**In standard configuration (includes transformer and weighted base)*

323 261 8999 | koncept.com | sales@koncept.com
429 E Huntington Dr, Monrovia, CA 91016

KONCEPT

KONCEPT

mosso pro

2013 Best of NeoCon GOLD
2014 Next Generation Luminaires "Best in Class"

Designer
Peter Ng, Kenneth Ng & Edmund Ng

Delivering a phenomenal 99 lumens per watt efficiency, Mosso Pro changes light colors from warm to cool and anything in between. An intuitive built-in touchstrip allows for effortless continuous dimming. Built-in occupancy sensor ensures no energy is wasted lighting up a vacant desk. For smart phone enthusiasts, Mosso Pro comes standard with an USB port, or optionally a wireless charging base is available for recharging Qi-compatible mobile devices. With Mosso Pro, anything is possible.

Lumens:	540
Energy Consumption:	5.5 watts
Number of LEDs:	48 LEDs
LED Rated Lifespan:	50,000 hours
Color Temperature:	Variable from 2,700K to 5,000 K
Color Rendering Index (CRI):	83
Dimmer:	Built-in touchstrip
Brightness Adjustability:	Continuous
Occupancy Sensor:	Built-in
Standard Color Finish*:	Metallic Black, Silver, White
Material:	Aluminum/Plastic
Cord Color:	Black
Cord Length:	10'
Transformer (100–240 V; 50/60 Hz):	Included – C-UL-US Certified
Maximum Brightness (15" above desk):	103 fc

Built-in USB port (on USB base)
*Custom colors are available at additional cost. Contact Koncept or your sales representative for a quote.

AR2001-___-___

- MBK = Metallic Black
- SIL = Silver
- WHT = White

- USB = USB Desk Base
- CLP = Clamp (One-Piece)
- 2CL = Two-Piece Clamp
- SLT = Slatwall Mount
- WAL = Wall Mount
- GRM = Grommet Mount
- THR = Through-table Mount
- QCB* = Wireless Charging Base*

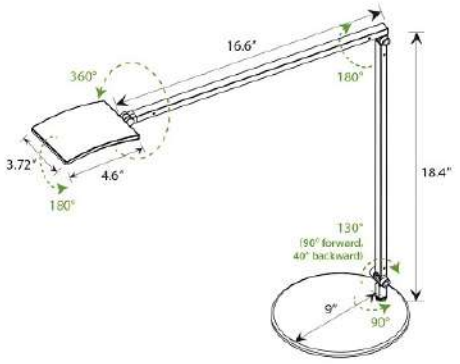

USB Desk base (MT-02-D006)
or
Wireless charging base (MT-02-D003)

Slatwall mount
(MT-01-S004)

Wall mount
(MT01W1)

Grommet mount
(MT-01-G001)

Two-piece clamp
(MT-01-C004)

Clamp (one-piece)
(MT01C3)

Through-table mount
(MT01T1)

Potential LEED Points:

Energy & Atmosphere (EA)
Credit 1.1: Optimize Energy Performance
LED lighting to reduce energy consumption.
(Potential points: 3)

Innovation In Design (ID)
Credit 1.1- 1.4: Innovation in Design
Mosso Pro features an LED head that swivels up and down and twirls a full 360 degrees. The lamp also features a built-in touchstrip for touch sensitive dimming.
(Potential points: 4)

Materials & Resources (MR)
Credit 4.1: Recycled Content - 10%
Lamps contain parts made out of 10% pre-consumer recycled content.
(Potential points: 1)
Credit 4.2: Recycled Content - 20%
Lamps contain parts made out of 20% pre-consumer recycled content.
(Potential points: 2)

Light source placed at 15" away from worksurface

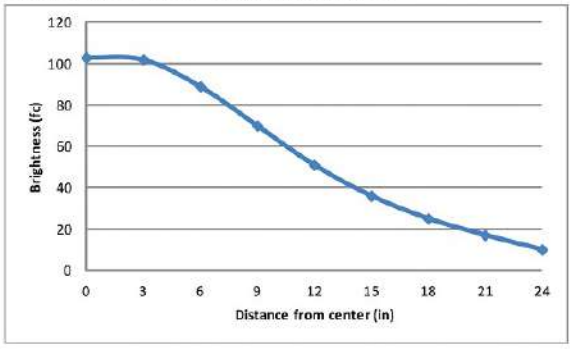

Lamp contains 31% preconsumer recycled material by weight*
Aluminum housing is fully recyclable
All color finishes use water-based paint
LEDs do not contain mercury

In standard configuration (includes transformer and weighted base)

323 261 8999 | koncept.com | sales@koncept.com
429 E Huntington Dr. Monrovia, CA 91016

KONCEPT

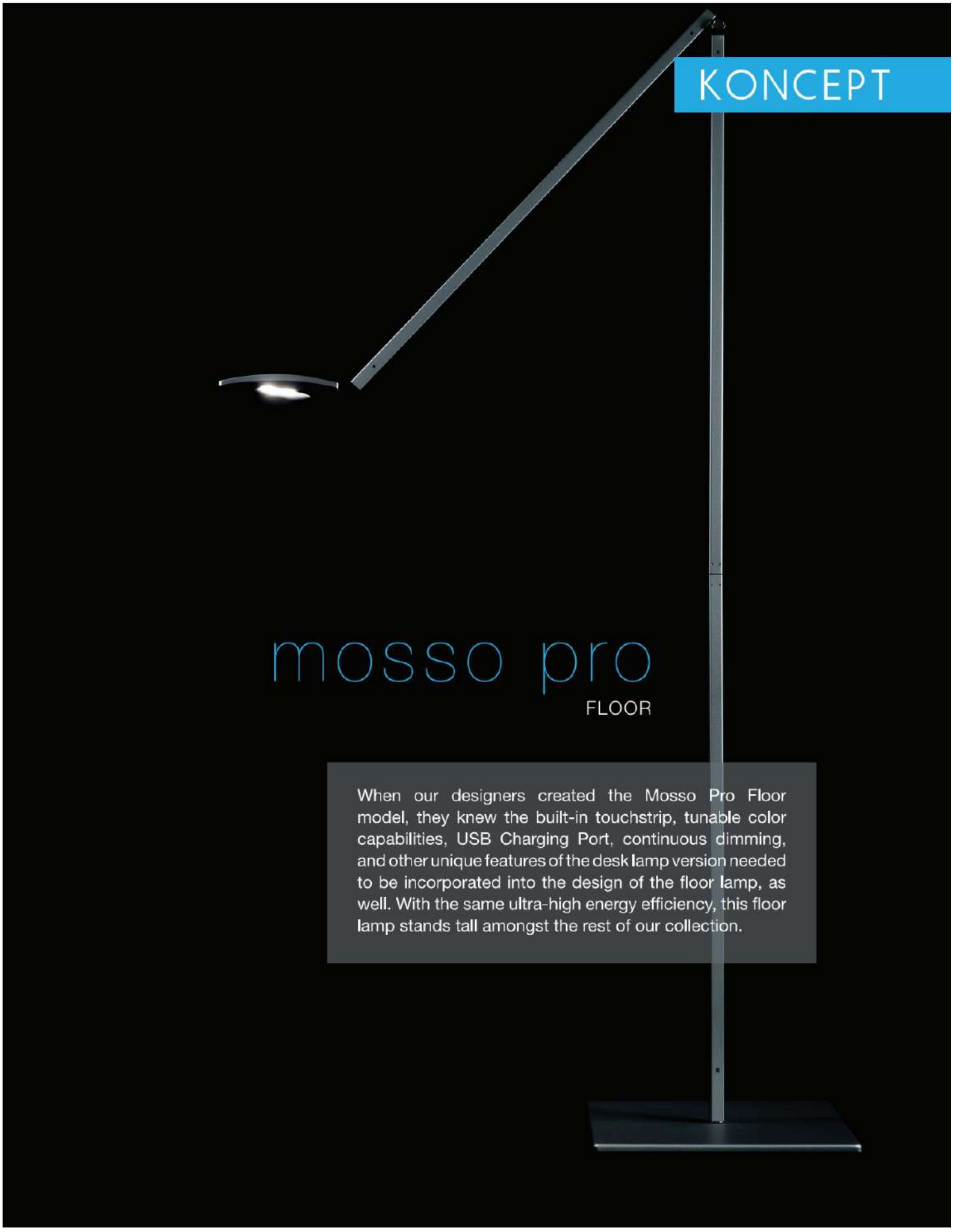
KONCEPT
mosso pro
FLOOR
When our designers created the Mosso Pro Floor model, they knew the built-in touchstrip, tunable color capabilities, USB Charging Port, continuous dimming, and other unique features of the desk lamp version needed to be incorporated into the design of the floor lamp, as well. With the same ultra-high energy efficiency, this floor lamp stands tall amongst the rest of our collection.

Lumens:	540
Energy Consumption:	5.5 watts
Number of LEDs:	48 LEDs
LED Rated Lifespan:	50,000 hours
Color Temperature:	Variable from 2,700 K to 5,000 K
Color Rendering Index (CRI):	83
Dimmer:	Built-in touchstrip
Brightness Adjustability:	Continuous
Standard Color Finish*:	Metallic Black, Silver, White
Material:	Aluminum/Plastic
Cord Color:	Black
Cord Length:	10'
Transformer (100–240 V; 50/60 Hz):	Included – C-UL-US Certified

AR2001-___-FLR

- MBK = Metallic Black
- SIL = Silver
- WHT = White
- FLR = Floor Stand

Built-in USB port

*Custom colors are available at additional cost. Contact Koncept or your sales representative for a quote.

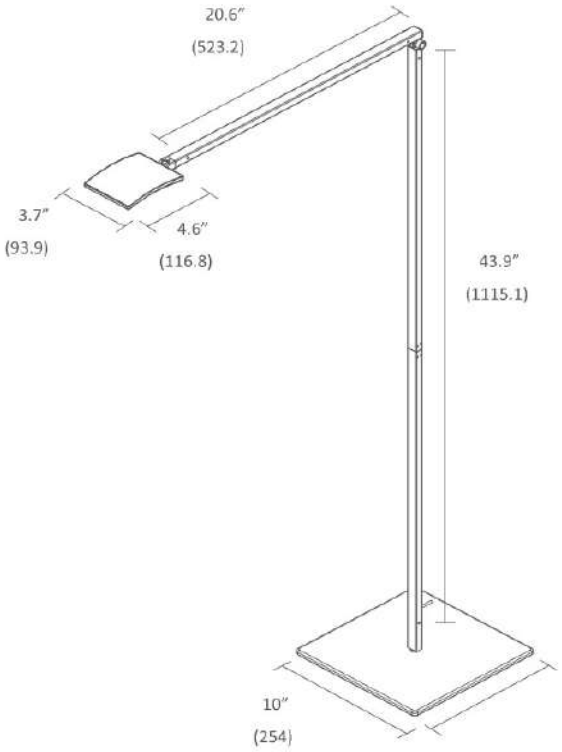

Energy & Atmosphere (EA)
Credit 1.1: Optimize Energy Performance
LED lighting to reduce energy consumption.
(Potential points: 3)

Innovation In Design (ID)
Credit 1.1- 1.4: Innovation in Design
Mosso Pro Floor features an LED head that swivels up and down and twirls a full 360 degrees. The lamp also features a built-in touchstrip for touch sensitive dimming.
(Potential points: 4)

Materials & Resources (MR)
Credit 4.1: Recycled Content - 10%
Lamps contain parts made out of 10% pre-consumer recycled content.
(Potential points: 1)
Credit 4.2: Recycled Content - 20%
Lamps contain parts made out of 20% pre-consumer recycled content.
(Potential points: 2)

Lamp contains 31% preconsumer recycled material by weight*
Aluminum housing is fully recyclable
All color finishes use water-based paint

LEDs do not contain mercury

**in standard configuration (includes transformer and weighted base)*

323 261 8999 | koncept.com | sales@koncept.com
429 E Huntington Dr, Monrovia, CA 91016

KONCEPT

KONCEPT

LADY7

2014 Japan Good Design Award
2014 Gold Spark Award
2014 Interiors & Sources Readers' Choice Award
2015 iF Design Award

Designer
Kenneth Ng & Edmund Ng

Designed with a wispy-thin silhouette, Lady7 provides a beautiful linear light source for your desk. Thanks to her cordless joint design and sleek, clean lines, Lady7 is perfect in any setting. Ultra efficient LEDs generate little heat and allow Lady7 to operate within safe temperatures & without the need for eyesore heat sink fins. All components are housed inside a simple right-angled shape, keeping a clean silhouette that is easy on the eyes.

Lumens	300
Energy Consumption:	6.5 watts
Number of LEDs:	6 LEDs
LED Rated Lifespan:	50,000 hours
Color Temperature	Variable from 2,700 K to 5,000 K
Color Rendering Index (CRI):	83
Dimmer:	Built-in touchstrip
Brightness Adjustability:	Continuous dimming
Standard Color Finish*:	Metallic Black, Silver, Matte Red, Matte White
Material:	Aluminum/Plastic
Cord Color:	Braided cord with matching color
Cord Length:	10'
Transformer (100–240 V; 50/60 Hz):	Included – C-UL-US Certified
Maximum Brightness (15" above desk):	100 fc

Built-in USB port
Built-in 5-hour auto-shutoff timer

*Custom colors are available at additional cost. Contact Koncept or your sales representative for a quote.

L7-___-DSK

- MBK = Metallic Black
- SIL = Silver
- MRD = Matte Red
- MWT = Matte White

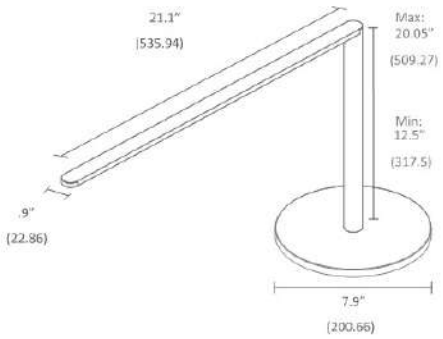

Potential LEED points:

Energy & Atmosphere (EA)
Credit 1.1: Optimize Energy Performance
LED lighting to reduce energy consumption.
(Potential points: 3)

Innovation In Design (ID)
Credit 1.1- 1.4: Innovation in Design
Lady 7 features telescopic arm and 360 degree rotation around the base to help put the light at any height any angle. The lamp also features a built-in touchstrip for brightness adjustability, and the innovative tunable White function to suit different light color preferences, any time of the day. An USB port is subtly built-in to the base for charging any smart devices.
(Potential points: 4)

Aluminum housing is fully recyclable
All color finishes use water-based paint
LEDs do not contain mercury

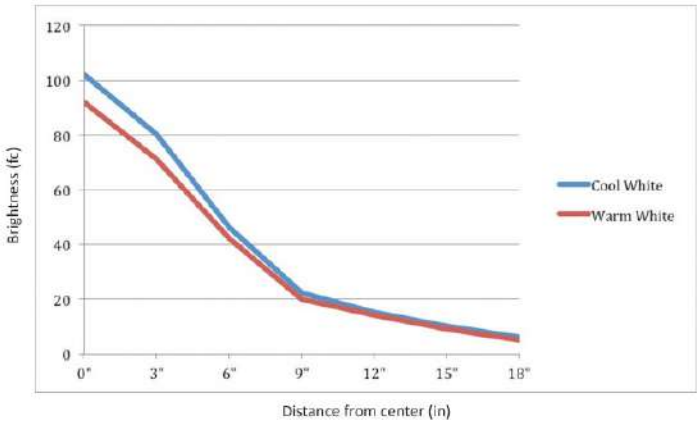

323 261 8999 | koncept.com | sales@koncept.com
429 E Huntington Dr. Monrovia, CA 91016

KONCEPT

KONCEPT
LADY 7 FLOOR
The sleek and sexy Lady7 is now reaching new heights. With all the same energy-efficient and minimalistic features as its desk lamp counterpart, Lady7 Floor is the perfect pop of color and design for any room. By extending the telescopic arm, this flexible lamp is even more capable of shining light where you want it.
Designer
Kenneth Ng & Edmund Ng

Lumens	300
Energy Consumption:	6.5 watts
Number of LEDs:	6 LEDs
LED Rated Lifespan:	50,000 hours
Color Temperature	Variable from 2,700 K to 5,000 K
Color Rendering Index (CRI):	83
Dimmer:	Built-in touchstrip
Brightness Adjustability:	Continuous dimming
Standard Color Finish*:	Metallic Black, Silver, Matte Red, Matte White
Material:	Aluminum/Plastic
Cord Color:	Braided cord with matching color
Cord Length:	10'
Transformer (100–240 V; 50/60 Hz):	Included – C-UL-US Certified

L7-___-FLR

- MBK = Metallic Black
- SIL = Silver
- MRD = Matte Red
- MWT = Matte White

Built-in USB port
Built-in 5-hour auto-shutoff timer

*Custom colors are available at additional cost. Contact Koncept or your sales representative for a quote.

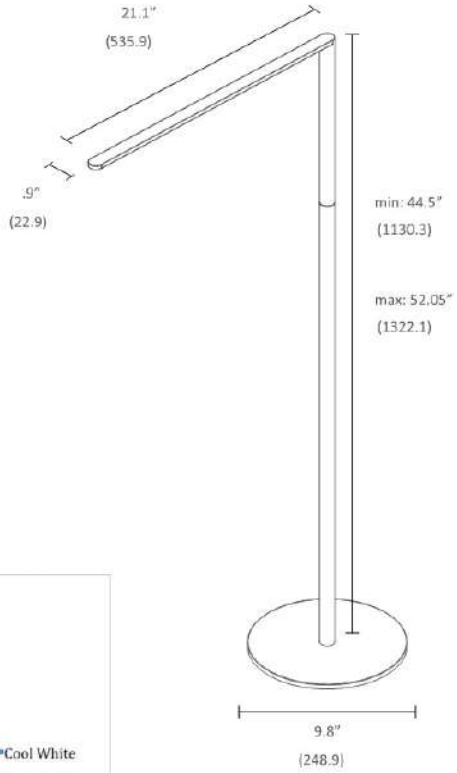

Potential LEED points:

Energy & Atmosphere (EA)
Credit 1.1: Optimize Energy Performance
LED lighting to reduce energy consumption.
(Potential points: 3)

Innovation In Design (ID)
Credit 1.1- 1.4: Innovation in Design
Lady 7 Floor features telescopic arm and 360 degree rotation around the base to help put the light at any height any angle. The lamp also features a built-in touchstrip for brightness adjustability, and the innovative tunable White function to suit different light color preferences, any time of the d ay

(Potential points: 4)

Aluminum housing is fully recyclable
All color finishes use water-based paint
LEDs do not contain mercury

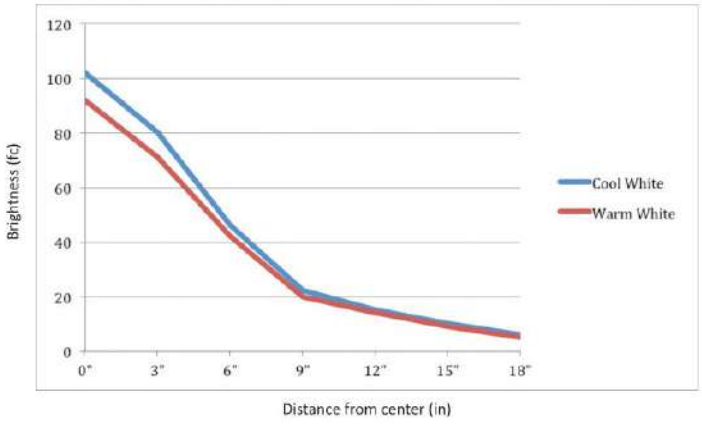

323 261 8999 | koncept.com | sales@koncept.com
429 E Huntington Dr. Monrovia, CA 91016

KONCEPT

KONCEPT

tōnō

2013 Best of NeoCon GOLD
JDP's Good Design Award 2013

Designer
Peter Ng, Kenneth Ng & Edmund Ng

Tono brings a whole new level of decorating to your room or office. Instead of providing standard white light, Tono offers a multitude of colors – including traditional white. Turn the lamp toward the room and watch the colors change, or turn it toward the wall to splash color on your walls. For those who crave the non-traditional, Tono is the lamp for you, and all of your moods.

Lumens:	600
Number of LEDs:	126
Energy Consumption:	18 W
LED Rated Lifespan:	10,000 hours
White Light Color Temp.:	From 2,700 K to 8,000 K
Color Range:	1,500 combinations of Red, Green & Blue
Dimmer:	Built-in Touch Sensor
Brightness Adjustability:	Continuous Dimming
Standard Color Finish[1]:	White
Material:	Aluminum/Plastic
Cord Length:	10'
Maximum Brightness:	Approx. 600 lumens

[1] Custom colors are available at additional cost. Contact Koncept or your sales representative for a quote.

MC1-WHT-FLR

WHT = White

FLR = Floor

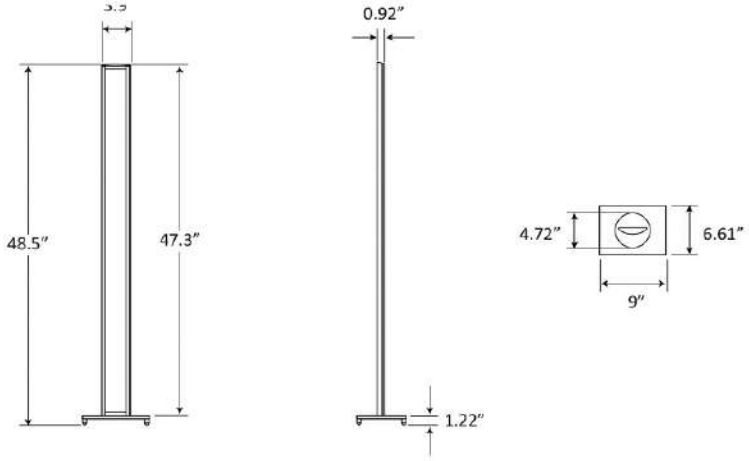

Potential LEED Points:

Energy & Atmosphere (EA)
Credit 1.1: Optimize Energy Performance
LED lighting to reduce energy consumption.
(Potential points: 3)

Innovation In Design (ID)
Credit 1.1- 1.4: Innovation in Design
Tono is capable of displaying white light from warm (~2,700 K) to cool (~8,000 K) temperature and cycling through 1,500 light color combinations of Red, Green, and Blue at different speed.
(Potential points: 4)

Aluminum housing is fully recyclable
All color finishes use water-based paint

LEDs do not contain mercury

323 261 8999 | koncept.com | sales@koncept.com
429 E Huntington Dr. Monrovia, CA 91016

KONCEPT

KONCEPT

gravy

Bring LED technology and the warmth of wood to your home or office lighting. Edge-lit technology provides a soft, evenly-distributed glow of warm white light. The illuminated LED head swivels 360°, and the wood bar slides back and forth to provide the user with the perfect lighting placement. This striking combination of real wood and aluminum is perfect for any setting. It's all Gravy.

JDP's Good Design Award 2013
Spark Awards 2013 SPARK! Winner

Designer
Kenneth Ng & Edmund Ng

Lumens:	275
Number of LEDs:	28
Energy Consumption:	6 W
LED Rated Lifespan:	50,000 hours
Typical Color Temp. – Warm:	3,500 K
Color Rendering Index (CRI):	85
Dimmer:	Built-in Touch Sensor
Brightness Adjustability:	Continuous Dimming
Standard Color Finish[1]:	Maple/Silver, White Oak/Matte White, Walnut/Matte White
Material:	Wood/Aluminum/Plastic
Cord Color[2]:	White, Blue, Red
Cord Length:	10'
Transformer (100–240 V; 50/60 Hz):	Included – C-UL-US Certified
Maximum Brightness:	100 fc

GR1-W-____-____-DSK

- W = Warm White Light
- MPW = Maple
- WOB = White Oak
- WNR = Walnut
- SIL = Silver
- MWT = Matte White

[1] Custom colors are available at additional cost. Contact Koncept or your sales representative for a quote.

[2] Cord color is corresponding to the color finish: White cord for Maple/Silver finish, Blue cord for White Oak/Matte White finish, and Red cord for Walnut/Matte White finish.

NOTE: Actual wood finish may vary due to natural variations in wood grain and finish.

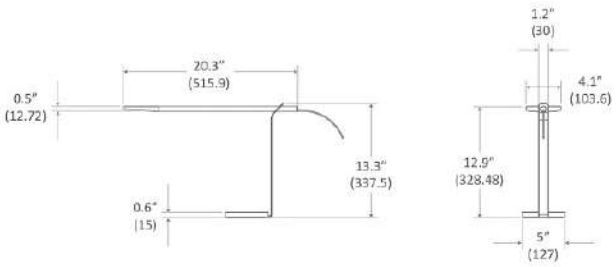

Wood finish / Cord color

Potential LEED Points:

Energy & Atmosphere (EA)

Credit 1.1: Optimize Energy Performance
LED lighting to reduce energy consumption.
(Potential points: 3)

Innovation In Design (ID)

Credit 1.1- 1.4: Innovation in Design
Gravy features edge lit technology that provides a soft, evenly distributed glow of warm light. A simply touch turns the lamp on/off and dims the light.
(Potential points: 4)

Materials & Resources (MR)

Credit 4.1: Recycled Content - 10%
Lamps contain parts made out of 10% pre-consumer recycled content.
(Potential points: 1)

Credit 4.2: Recycled Content - 20%
Lamps contain parts made out of 20% pre-consumer recycled content.
(Potential points: 2)

Light source placed at 12.75" away from worksurface

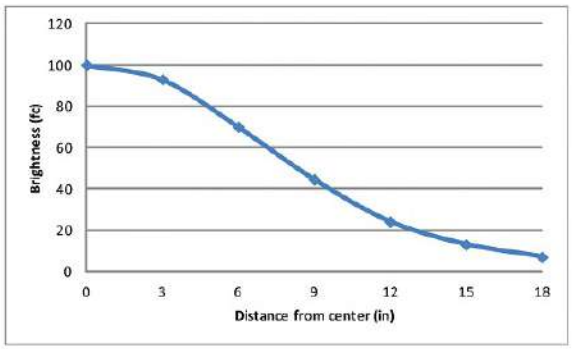

Aluminum housing is fully recyclable
All color finishes use water-based paint

LEDs do not contain mercury

323 261 8999 | koncept.com | sales@koncept.com
429 E Huntington Dr. Monrovia, CA 91016

KONCEPT

KONCEPT

gravy
wall sconce

Spark Awards 2015 Gold Winner
iF Design Award 2016

Designer
Kenneth Ng & Edmund Ng

The Gravy wall sconce maintains its creative, customizable, and contemporary aesthetic while remaining efficient, multi-purpose, and fully-functional. Gravy's swiveling head turns 360 degrees and can bend forward to be used as an ambient light or a direct task light by shining downward. The light can be operated by a wall switch or by touching the center of the LED head and holding it to dim the brightness. Go with the plug-in version, or choose the hardwired option for new installations. Surface plates on the Gravy are customizable, enabling users to select painted finishes, wood veneers, or fabric to match their interior space.

Lumens:	300
Energy Consumption:	5.5Watts
Rated Lifespan:	50,000 hours
Color Temperature:	2,700K
CRI:	83
Wall Switch (hardwired):	Compatible with any ELV wall dimmer and any 0-10V wall dimmer.
Dimmer:	Built-in touch dimmer switch
Brightness Adjustability:	Continuous Dimming
Standard Finishes:	Matte White, Silver, Chrome, Metallic Black, Oiled Walnut, White Oak, Matte Orange, Matte Red, Matte Yellow, Matte Hot Pink, Matte Blue, Matte Green, Oxford Felt, Honeydew Felt, Azure Felt
Material:	Zinc alloy, plastic

GRW-S-___-___-__

- MWT = Matte White
- SIL = Silver
- CRM = Chrome
- MBK = Metallic Black

- MWT = Matte White
- SIL = Silver
- CRM = Chrome
- MBK = Metallic Black
- OWT = Oiled Walnut
- WOK = White Oak
- MOR = Matte Orange
- MRD = Matte Red
- MYW = Matte Yellow
- MHP = Matte Hot Pink
- MBL = Matte Blue
- MGN = Matte Green
- OXF = Oxford (Felt)
- HDF = Honeydew (Felt)
- AZF = Azure (Felt)

- HW = Hardwired
- PI = Plugged in

Light source placed at 15" away from worksurface

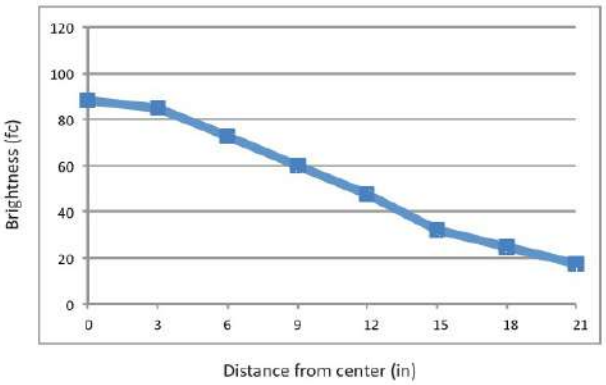

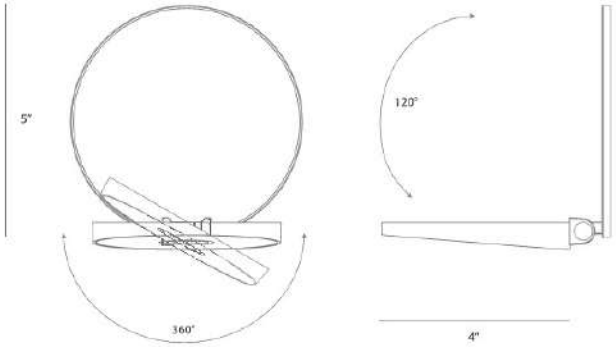

Potential LEED Points:

Energy & Atmosphere (EA)
Credit 1.1: Optimize Energy Performance
LED lighting to reduce energy consumption.
(Potential points: 3)

Innovation In Design (ID)
Credit 1.1 - 1.4: Innovation in Design
The head swivels a full 360 degrees giving the user full control in where the light shines. Shine it up for ambient lighting, or down as a task light. The LED head can be detached from the main body for easy warranty service. The light can be controlled at its head or by a wall dimmer. Also, the customizable surfaces would bring flexibility to users to create their own unique look. All these ideas are very unique to Gravy, additionally, the head swiveling and detachable joint mechanism with no external wires is a patented invention.
(Potential points: 4)

All color finishes use water-based paint
LEDs do not contain mercury

323 261 8999 | koncept.com | sales@koncept.com
429 E Huntington Dr, Monrovia, CA 91016

KONCEPT

KONCEPT

mr.n

Interior Design's Best of Year Honoree 2013 Product
Spark Awards 2013 Bronze Winner
Metropolis Likes Award 2014

Designer
Peter Ng

Meet Mr. n- an arch-shaped lamp that combines a unique, fashion foward design that houses cutting-edge, omni-directional light. Mr. n provides a soft, warm glow on the outside of the lamp, and the simple yet complete control system is located in the aluminum interior. A one-finger touch on the bottom section of the lamp exterior makes the lamp glow or turns it off. Invite Mr. n into your home or office.

Lumens:	250
Number of LEDs:	28
Energy Consumption:	5 W
LED Rated Lifespan:	50,000 hours
Typical Color Temperature – Soft White:	2,700 K
Color Rendering Index (CRI):	85
Dimmer:	Built-in Touch Sensor
Brightness Adjustability:	Continuous Dimming
Standard Color Finish[1]:	Metallic Black, Silver
Material:	Aluminum/Plastic
Cord Length:	10'
Transformer (100–240 V; 50/60 Hz):	Included – C-UL-US Certified
Maximum Brightness:	Approx. 250 lumens

NL1-S-____-DSK

- S = Soft White Light
- MBK = Metallic Black
- SIL = Silver

[1] Custom colors are available at additional cost. Contact Koncept or your sales representative for a quote.

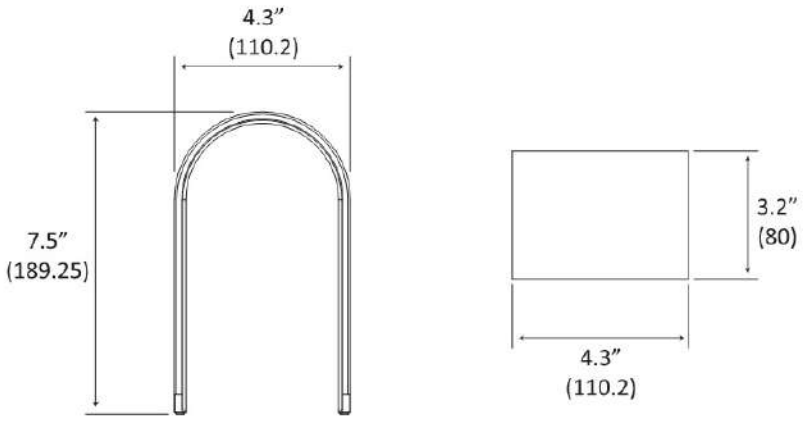

Potential LEED Points:

Energy & Atmosphere (EA)
Credit 1.1: Optimize Energy Performance
LED lighting to reduce energy consumption.
(Potential points: 3)

Innovation In Design (ID)
Credit 1.1- 1.4: Innovation in Design
Mr. n features a seamless light panel technology for omni-directional light. A one-finger touch on the lamp makes the lamp glow or turns it off.
(Potential points: 4)

Aluminum housing is fully recyclable
All color finishes use water-based paint

LEDs do not contain mercury

323 261 8999 | koncept.com | sales@koncept.com
429 E Huntington Dr. Monrovia, CA 91016

KONCEPT

KONCEPT

UCX

red dot: product design winner 2012
2011 Best of NeoCon GOLD

Designer
Peter Ng, Kenneth Ng & Edmund Ng

Say goodbye to big, boxy undercabinet lights or LED tape. UCX embodies everything you want in a great undercabinet light. This thin bar of tiny LEDs fits anywhere you need them- under a cabinet or shelf or anywhere you need light without the light source being seen.

Lumens:	475	760	1193
Model:	UCX-42	UCX-63	UCX-91
Number of LEDs:	42	63	91
Luminaire Energy Consumption:	8.5 W	13.5 W	18.5 W
System Energy Consumption[1]:	11W	16 W	23 W
LED Rated Lifespan:	50,000 hours		
Color Temperature (Typical) – Cool:	4,500 K		
Color Temperature (Typical) – Warm:	3,500 K		
Color Rendering Index (CRI):	85		
Dimmer:	Built-in touchstrip		
Brightness Adjustability:	Multiple dimming levels		
Standard Color Finish[2]:	Metallic Black, Silver, White		
Material:	Aluminum/Plastic		
Mounting:	Magnetic/Screw Mounts (Included)		
Maximum Chained Units:	4 units	3 units	2 units
Maximum Brightness[3] (18" above desk):	124 fc	146 fc	160 fc
Length of Daisy Chain Cord:	1" (male-to-male connector), 12", 30"		
Transformer:	24 or 48 watts		

[1] Total energy consumption for luminaire & transformer.
[2] Custom colors are available at additional cost. Contact Koncept or your sales representative for a quote.
[3] Maximum brightness on diffused light models.

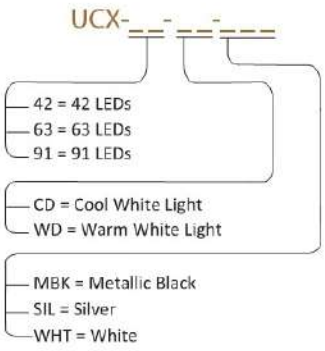

NOTE:
For power supply with CHICAGO CODE OPTION, add "-CHGO" at the end of the model number.

UCX-42 (42 LEDs)

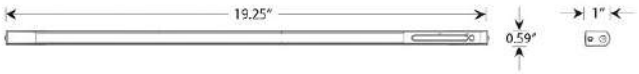

UCX-63 (63 LEDs)

UCX-91 (91 LEDs)

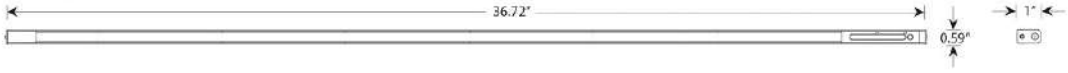

Light source placed at 18" away from worksurface

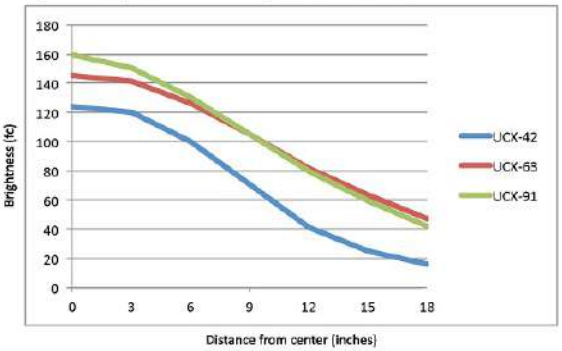

ccupancy sensor
P7-03-OCC01A)

30" daisy chain cord
(P6-10-D3096A-1)

12" daisy chain cord
(P6-10-D1296A-1)

male to male connector
(P6-10-D0096A-1)

Standard 24W power supply
(P9-240100A-2-US)

Large 48W power supply
(P9-240200A-2-US)

Large 48W power supply – with CHICAGO CODE OPTION (P9-240200A-2-US-CHGO)

Potential LEED Points:

Energy & Atmosphere (EA)
Credit 1.1: Optimize Energy Performance
LED lighting to reduce energy consumption.
(Potential points: 3)

Innovation In Design (ID)
Credit 1.1- 1.4: Innovation in Design
UCX™ allows effortless full control with the use of daisy-chain(s) to chain multiple units to run on a single outlet while the chained units can be individually controlled or synced. The light also features a built-in touchstrip for touch sensitive dimming.
(Potential points: 4)

Aluminum housing is fully recyclable
All color finishes use water-based paint

LEDs do not contain mercury

323 261 8999 | koncept.com | sales@koncept.com
429 E Huntington Dr. Monrovia, CA 91016

KONCEPT

KONCEPT

UCX PRO

2015 Best of NeoCon GOLD
Product Innovations 2015 BUILDINGS Favorite

Designer
Kenneth Ng & Edmund Ng

Following the immense success of the original UCX LED undercabinet light (winner of 2011 Best of NeoCon GOLD and red dot: product design winner 2012 awards), Koncept is proud to introduce the UCX Pro. This new version enters Koncept's Pro family (Mosso Pro LED Desk and Floor lamps) that is characterized by exciting, innovative features while maintaining an emphasis on ultra-high energy efficiency, intuitive control, and sleek, minimalistic design. The UCX Pro is already the recipient of the 2015 NeoCon Gold award and the 2015 BUILDINGS Favorite for Product Innovations.

Preliminary Specifications

Lumens:	760	1216	1672
Model:	UCX-19	UCX-27	UCX-37
Number of LEDs:	84	126	182
Energy Consumption:	6.4 W	10.2 W	14 W
LED Rated Lifespan:	50,000 hours		
Color Temperature:	Variable from 2,700K to 5,000K		
Color Rendering Index (CRI):	83		
Dimmer:	Built-in touchstrip		
Brightness Adjustability:	Continuous dimming		
Standard Color Finish*:	Silver		
Material:	Aluminum/Plastic		
Mounting:	Magnetic/Screw Mounts (Included)		
Maximum Chained Units:	4 units	3 units	2 units
Length of Daisy Chain Cord:	1" (male-to-male connector), 12", 30"		
Transformer:	24 or 48 watts		

UCX-__-___

- 19 = 19" length
- 27 = 27" length
- 37 = 37" length
- SIL = Silver

NOTE:
For power supply with CHICAGO CODE OPTION, add "-CHGO" at the end of the model number.

*Custom colors are available at additional cost. Contact Koncept or your sales representative for a quote.

UCX-19 (84 LEDs)

UCX-27 (126 LEDs)

UCX-37 (182 LEDs)

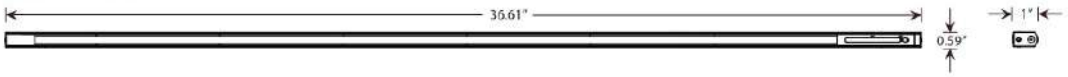

30" daisy chain cord
12" daisy chain cord

male to male connector
Standard 24W power supply
Large 48W power supply

Wifi module

Occupancy sensor

Energy & Atmosphere (EA)
Credit 1.1: Optimize Energy Performance
LED lighting to reduce energy consumption.
(Potential points: 3)

Innovation In Design (ID)
Credit 1.1- 1.4: Innovation in Design
UCX Pro allows effortless full control with the use of daisy-chain(s) to chain multiple units to run on a single outlet while the chained units can be individually controlled or synced. The light also features a built-in touchstrip for touch sensitive dimming, optional occupancy sensor, tunable light color, optional wifi control and scheduling.
(Potential points: 4)

Aluminum housing is fully recyclable
All color finishes use water-based paint
LEDs do not contain mercury

KONCEPT

KONCEPT
Sobre
Sobre rises above your work surface to provide both ambient and task light – and all levels in between. The Sobre LED light bar rotates to shine light directly on your desk or work area, or rotates up for perfect, ambient light. Ideal for long tables or public areas, Sobre mounts directly to the table or desk to maximize the available workspace.
Next Generation Luminaires Winner 2013
2012 Best of NeoCon SILVER
Designer
Peter Ng, Kenneth Ng & Edmund Ng

Lumens:	525	725
Model:	SF1-30	SF1-40
Number of LEDs:	42	56
Energy Consumption:	11 W	14 W
LED Rated Lifespan:	50,000 hours	
Color Temperature (Typical) – Cool:	4,500 K	
Color Temperature (Typical) – Warm:	3,500 K	
Color Rendering Index (CRI):	85	
Dimmer[1]:	Built-in touchstrip	
Brightness Adjustability[1]:	Multiple dimming levels	
Standard Color Finish[2]:	Metallic Black, Silver, White	
Material:	Aluminum/Plastic	
Mounting:	Through-table Mount (Included), Fixed 2-piece Clamp Mount	
Maximum Brightness (18" above desk)[3]:	87 fc	
Maximum Connected Modules:	4	3
Transformer:	48 watts	
Accessories:	Optional control unit	

[1] Included in *optional* control unit only.
[2] Custom colors are available at additional cost. Contact Koncept or your sales representative for a quote.
[3] Maximum brightness of SF1-30 model.

SF1-__-__-___-___-___

- 30 = 3' (42 LEDs)
- 40 = 4' (56 LEDs)
- 60 = 6' (84 LEDs)
- 80 = 8' (112 LEDs)
- 90 = 9' (126 LEDs)

- CD = Cool Diffused Light
- WD = Warm Diffused Light

- MBK = Metallic Black
- SIL = Silver
- WHT = White

- THR = Through Table Mount
- 2CF = Fixed 2-Piece Clamp Mount

- ODC = Occupancy Sensor and Dimmer Control (optional)

(All models capable of rotation up to 360 degrees; 180 degrees to each side)

SF1-30 (42 LEDs)

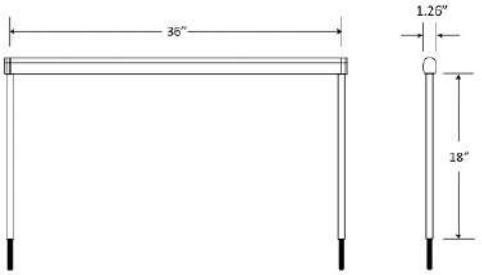

SF1-40 (56 LEDs)

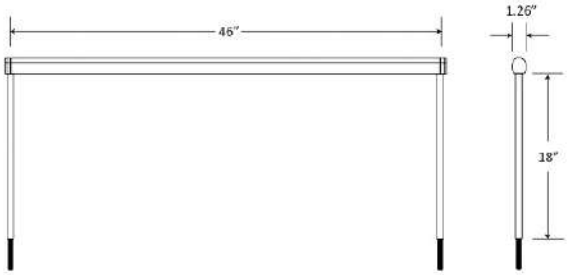

Light source placed at 18" away from worksurface

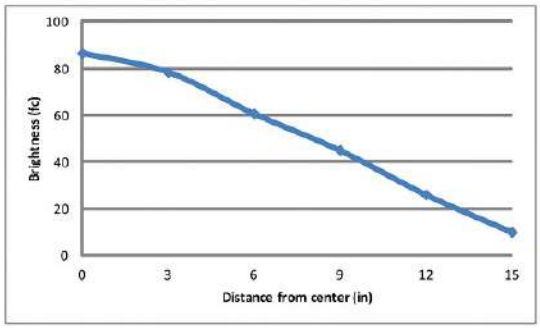

(Shown: photometrics of SF1-30)

Potential LEED Points:

Energy & Atmosphere (EA)

Credit 1.1: Optimize Energy Performance
LED lighting to reduce energy consumption.
(Potential points: 3)

Innovation In Design (ID)

Credit 1.1- 1.4: Innovation in Design
Sobre can be connected up to 3 modules for extended light coverage. The rotatable horizontal light bar and the optional control unit (with built-in touchstrip and occupancy sensor) provide maximum flexibility and convenience. Anti-theft mounting options available for public installation.
(Potential points: 4)

Aluminum housing is fully recyclable
All color finishes use water-based paint

LEDs do not contain mercury

323 261 8999 | koncept.com | sales@koncept.com
429 E Huntington Dr. Monrovia, CA 91016

KONCEPT

EQUO DESK LAMP

Display product dimensions:	L-32", H-24.50", D-7.50"	Lumens:	360
Net weight (Lamp only):	4.48 lb.	Lux:	1313
Product packaging dimensions:	L-26.2", W-13.2", H-2.2"	Energy Consumption:	6
Packed weight (Lamp+Packaging):	6.28 lb.	Lumens/Watt:	60
Ship via:	UPS, TRK	Footcandles:	122
Safety rating:	UL, CUL	Voltage:	100-240V
Warranty:	5 years	ELX-A-?-YYY-DSK	$220.00

YYY = CRM, "Chrome Finish" +$30

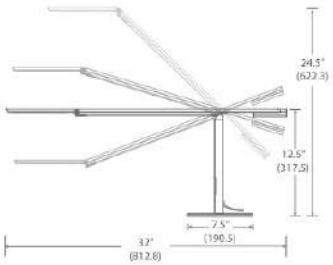

EQUO FLOOR LAMP

Display product dimensions:	L-32", H-56.75", D-10"	Lumens:	360
Net weight (Lamp only):	7.11 lb.	Lux:	1313
Product packaging dimensions:	L-35.47", W-12", H-3.46"	Energy Consumption:	6
Packed weight (Lamp+Packaging):	11.5 lb.	Lumens/Watt:	60
Ship via:	UPS, TRK	Footcandles:	122
Safety rating:	UL, CUL	Voltage:	100-240V
Warranty:	5 years	ELX-A-?-???-FLR	$299.00

Equo Desk & Floor Accessories

P7-02-OCC01A-???	Occupancy Sensor for "ELX-A" Equos	$50.00
MT-05-D001-???	Equo Desk Base	$25.00
MT-06-F001-???	Equo Floor Base	$40.00
P9-240050A-1-US	Adapter (24V, 0.5A, straight plug) for AR and ELX-A series	$18.00

YYY = CRM, "Chrome Finish" +$61

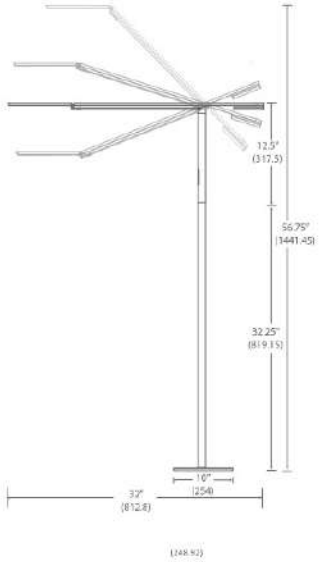

LADY7

Display product dimensions:	L-21.10", H-20.05", D-7.90"	Lumens:	
Net weight (Lamp only):	4.69lb.	Lux:	1080
Product packaging dimensions:	L-25", W-14.75", H-14.50"	Energy Consumption:	6.5
Packed weight (Lamp+Packaging):	6.81lb.	Lumens/Watt:	46
Ship via:	UPS, TRK	Footcandles:	100
Safety rating:	UL, CUL	Voltage:	100-240V
Warranty:	5 years	L7-???-DSK	$299.00

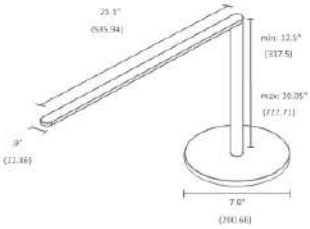

LADY7 FLOOR LAMP

Display product dimensions:	L-21.10", H-52.05", D-9.80"	Lumens:	300
Net weight (Lamp only):	6.13lb.	Lux:	1080
Product packaging dimensions:	L-35.50", W-14.75", H-14.50"	Energy Consumption:	6.5
Packed weight (Lamp+Packaging):	9.19lb.	Lumens/Watt:	46
Ship via:	UPS, TRK	Footcandles:	100
Safety rating:	UL, CUL	Voltage:	100-240V
Warranty:	5 years	L7-???-FLR	$385.00

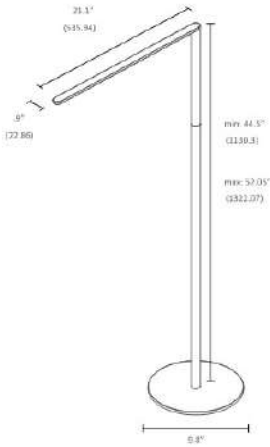

Prices are FOB Los Angeles and are listed in U.S. Currency. Prices effective as of the date of this printing and are subject to change. The double ?? in the SKU number indicates the light code WD (Warm Diffused) or CD (Cool Diffused). Diffused version NOT offered on Equo desk & floor lamps- use W or C only. The triple ??? indicates the 3-digit finish code. The light codes and the finish codes can be found in the product brochure or on our website. All case packs ship in quantities of 5 except UCX which contains 7 per case, and Mr. N that ships 10 per case.

TONO

Display product dimensions:	L-9", H-48.5", D-6.6"
Net weight (Lamp only):	8.29 lb.
Product packaging dimensions:	L-8.8", W-11.1", H-50.1"
Packed weight (Lamp+Packaging):	13.54 lb.
Ship via:	UPS, TRK
Safety rating:	UL, CUL
Warranty:	2 years

Lumens:	600
Lux:	n/a
Energy Consumption:	18
Lumens/Watt:	33
Footcandles:	n/a
Voltage:	100-240V
MC1-WHT-FLR	$612.00

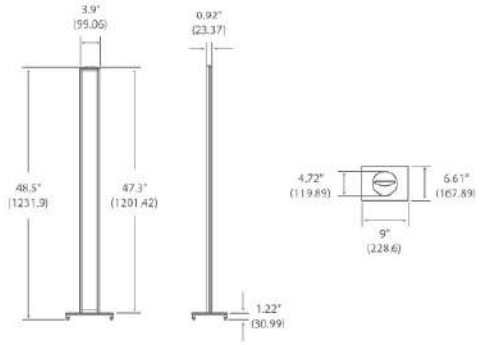

MR. n

Display product dimensions:	L-4.3", H-7.5", D-3.2"
Net weight (Lamp only):	1.1 lb.
Product packaging dimensions:	L-9", W-6.5", H-4.25"
Packed weight (Lamp+Packaging):	1.6 lb.
Ship via:	UPS, TRK
Safety rating:	UL, CUL
Warranty:	5 years

Lumens:	250
Lux:	n/a
Energy Consumption:	7.5
Lumens/Watt:	33
Footcandles:	n/a
Voltage:	100-240V
NL1-S-???-DSK	$139.00

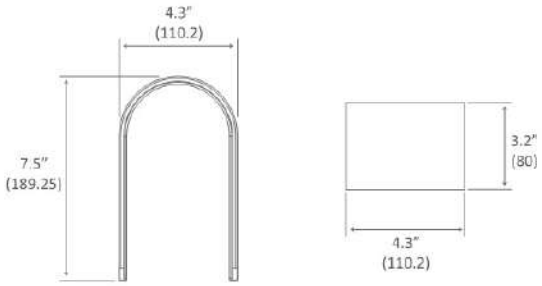

GRAVY

Display product dimensions:	L-20.3", H-13.3", D-5"
Net weight (Lamp only):	3.5 lb.
Product packaging dimensions:	L-23.2", W-8.5", H-7.15"
Packed weight (Lamp+Packaging):	6.5 lb.
Ship via:	UPS, TRK
Safety rating:	UL, CUL
Warranty:	5 years

Lumens:	275
Lux:	1076
Energy Consumption:	6
Lumens/Watt:	46
Footcandles:	100
Voltage:	100-240V
GR1-W-???-???-DSK	$220.00

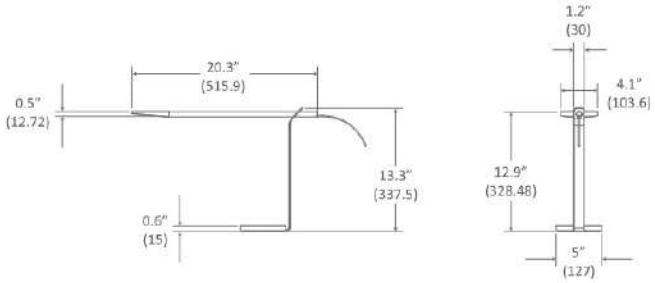

Prices are FOB Los Angeles and are listed in U.S. Currency. Prices effective as of the date of this printing and are subject to change. The double ?? in the SKU number indicates the light code WD (Warm Diffused) or CD (Cool Diffused). Diffused version NOT offered on Equo desk & floor lamps- use W or C only. The triple ??? indicates the 3-digit finish code. The light codes and the finish codes can be found in the product brochure or on our website. All case packs ship in quantities of 5 except UCX which contains 7 per case, and Mr. N that ships 10 per case.

MOSSO PRO DESK LAMP

Display product dimensions:	L-21.10", H-18.00", D-9.00"
Net weight (Lamp only):	4.85 lb.
Product packaging dimensions:	L-18.1", W-11.8", H-3.54"
Packed weight (Lamp+Packaging):	7.16 lb.
Ship via:	UPS, TRK
Safety rating:	UL, CUL
Warranty:	5 years

Lumens:	540
Lux:	1108
Energy Consumption:	5.5
Lumens/Watt:	99
Footcandles:	103 fc
Voltage:	100-240V
AR2001-???-YYY	$350.00

YYY = USB	USB Base	-$0
YYY = DSK	Desk Base	-$20
YYY = CLP	Clamp Mount	-$30
YYY = SLT	Slatwall Mount	-$30
YYY = WAL	Wall Mount	-$30
YYY = THR	Through-table Mount	-$30
YYY = 2CL	2-piece Clamp	-$28
YYY = GRM	Grommet Mount	-$20
YYY = QCB	Wireless Charging Base	+$61

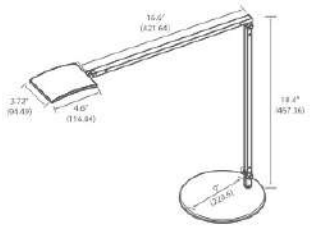

MOSSO PRO FLOOR LAMP

Display product dimensions:	L-25.20", H-43.90", D-10.00"
Net weight (Lamp only):	8.3 lb.
Product packaging dimensions:	L-24", W-11.8", H-3.54"
Packed weight (Lamp+Packaging):	11 lb.
Ship via:	UPS, TRK
Safety rating:	UL, CUL
Warranty:	5 years

Lumens:	540
Lux:	1108
Energy Consumption:	5.5
Lumens/Watt:	99
Footcandles:	103 fc
Voltage:	100-240V
AR2001-???-FLR	$385.00

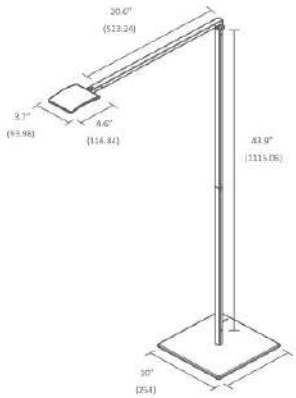

Z-BAR

Display product dimensions:	L-33.88", H-16.42", D-9.00"
Net weight (Lamp only):	5.53 lb.
Product packaging dimensions:	L-18.1", W-11.8", H-3.54"
Packed weight (Lamp+Packaging):	7.38 lb.
Ship via:	UPS, TRK
Safety rating:	UL, CUL
Warranty:	5 years

Lumens:	475
Lux:	1776
Energy Consumption:	9.5
Lumens/Watt:	50
Footcandles:	165
Voltage:	100-240V
AR3000-??-???-YYY	$330.00

YYY = DSK	Standard Base	-$0
YYY = CLP	Clamp Mount	-$10
YYY = SLT	Slatwall Mount	-$10
YYY = WAL	Wall Mount	-$10
YYY = THR	Through-table Mount	-$10
YYY = 2CL	2-piece Clamp	-$8
YYY = GRM	Grommet Mount	-$0

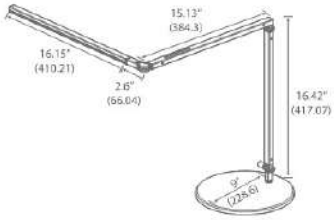

Z-BAR SLIM

Display product dimensions:	L-29.7", H-14.3", D-9.00"
Net weight (Lamp only):	5 lb.
Product packaging dimensions:	L-18.3", H-11.8", W-3.54"
Packed weight (Lamp+Packaging):	6.98 lb.
Ship via:	UPS, TRK
Safety rating:	UL, CUL
Warranty:	5 years

Lumens:	400
Lux:	1399
Energy Consumption:	8.5
Lumens/Watt:	47
Footcandles:	130
Voltage:	100-240V
AR3200-??-???-YYY	$285.00

YYY = DSK	Standard Base	-$0
YYY = CLP	Clamp Mount	-$10
YYY = SLT	Slatwall Mount	-$10
YYY = WAL	Wall Mount	-$10
YYY = THR	Through-table Mount	-$10
YYY = 2CL	2-piece Clamp	-$8
YYY = GRM	Grommet Mount	-$0

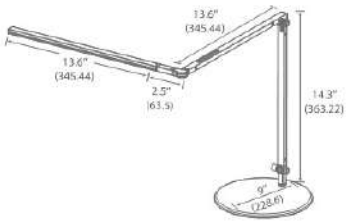

Prices are FOB Los Angeles and are listed in U.S. Currency. Prices effective as of the date of this printing and are subject to change. The double ?? in the SKU number indicates the light code WD (Warm Diffused) or CD (Cool Diffused). Diffused version NOT offered on Equo desk & floor lamps- use W or C only. The triple ??? indicates the 3-digit finish code. The light codes and the finish codes can be found in the product brochure or on our website. All case packs ship in quantities of 5 except UCX which contains 7 per case, and M4 N that ships 10 per case.

Z-BAR MINI

Display product dimensions:	L-25.64", H-12.70", D-7.5"	Lumens:	320
Net weight (Lamp only):	3.57 lb.	Lux:	1238
Product packaging dimensions:	L-14", W-10.24", H-3.54"	Energy Consumption:	6.5
Packed weight (Lamp+Packaging):	5.05 lb.	Lumens/Watt:	49
Ship via:	UPS, TRK	Footcandles:	115
Safety rating:	UL, CUL	Voltage:	100-240V
Warranty:	5 years	AR3100-??-???-YYY	$265.00

YYY = DSK	Standard Base	-$0
YYY = CLP	Clamp Mount	-$5
YYY = SLT	Slatwall Mount	-$5
YYY = WAL	Wall Mount	-$5
YYY = THR	Through-table Mount	-$5
YYY = 2CL	2-piece Clamp	-$3
YYY = GRM	Grommet Mount	+$5

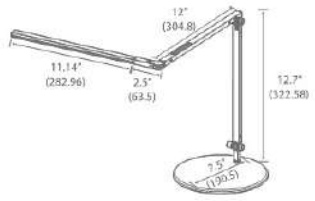

Z-BAR SOLO

Display product dimensions:	L-19.2", H-14.3", D-9.00"	Lumens:	400
Net weight (Lamp only):	4.52 lb.	Lux:	1399
Product packaging dimensions:	L-18.1", W-11.8", H-3.54"	Energy Consumption:	8.5
Packed weight (Lamp+Packaging):	6.9 lb.	Lumens/Watt:	47
Ship via:	UPS, TRK	Footcandles:	130
Safety rating:	UL, CUL	Voltage:	100-240V
Warranty:	5 years	AR1000-??-???-YYY	$272.00

YYY = DSK	Standard Base	-$0
YYY = CLP	Clamp Mount	-$10
YYY = SLT	Slatwall Mount	-$10
YYY = WAL	Wall Mount	-$10
YYY = THR	Through-table Mount	-$10
YYY = 2CL	2-piece Clamp	-$8
YYY = GRM	Grommet Mount	-$0

Z-BAR SOLO MINI

Display product dimensions:	L-14.15", H-15", D-7.5"	Lumens:	320
Net weight (Lamp only):	3.69 lb.	Lux:	1238
Product packaging dimensions:	L-15.35", W-10.24, H-3.54"	Energy Consumption:	6.5
Packed weight (Lamp+Packaging):	4.91 lb.	Lumens/Watt:	49
Ship via:	UPS, TRK	Footcandles:	115
Safety rating:	UL, CUL	Voltage:	100-240V
Warranty:	5 years	AR1100-??-???-YYY	$250.00

YYY = DSK	Standard Base	-$0
YYY = CLP	Clamp Mount	-$10
YYY = SLT	Slatwall Mount	-$10
YYY = WAL	Wall Mount	-$10
YYY = THR	Through-table Mount	-$10
YYY = 2CL	2-piece Clamp	-$8
YYY = GRM	Grommet Mount	+$5

Z-BAR FLOOR LAMP

Display product dimensions:	L-32.7", H-44", D-10"	Lumens:	475
Net weight (Lamp only):	6.79 lb.	Lux:	1776
Product packaging dimensions:	L-23.4", W-11.8", H-3.54"	Energy Consumption:	9.5
Packed weight (Lamp+Packaging):	9.57 lb.	Lumens/Watt:	50
Ship via:	UPS, TRK	Footcandles:	165
Safety rating:	UL, CUL	Voltage:	100-240V
Warranty:	5 years	AR5000-??-???-YYY	$360.00

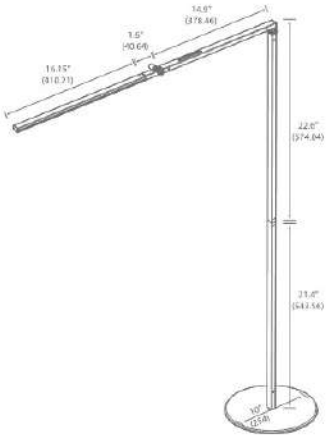

Z-Bar / Mosso Pro Desk & Floor Accessories

P7-01-OCC01A-???	Occupancy Sensor for Z-Bar Series	$50.00
MT-02-D005-???	USB Base with adapter for Z-Bar/Z-Bar Slim/Z-Bar Solo	$75.00
MT-02-D006-???	USB without adapter for Mosso Pro	$50.00
MT-02-D003-???	Z-Bar/Z-Bar Slim/Z-Bar Solo/Mosso Pro Wireless Charging Base	$111.00
MT-02-D001-???	Z-Bar/Z-Bar Slim/Z-Bar Solo/Mosso Pro Regular Base	$30.00
MT-02-D002-???	Z-Bar Mini/Z-Bar Solo Mini Base	$25.00
MT-03-F002-???	Z-Bar Floor Base	$40.00
MT01C3-???	Clamp	$20.00
MT-01-C004-???	Two-Piece Clamp, Rubber Handle	$22.00
MT-01-S004-???	Slatwall Mount	$20.00
MT01W1-???	Wall Mount	$20.00
MT-01-G001	Grommet Mount (with cable passthrough)	$30.00
MT01T1	Through-table Mount	$20.00
P9-240050A-1-US	Adapter (24 V 0.5A straight plug) for AR and ELX series	$18.00

Prices are FOB Los Angeles and are listed in U.S. Currency. Prices effective as of the date of this printing and are subject to change. The double ?? in the SKU number indicates the light code WD (Warm Diffused) or CD (Cool Diffused). Diffused version NOT offered on Equo desk & floor lamps- use W or C only. The triple ??? indicates the 3-digit finish code. The light codes and the finish codes can be found in the product brochure or on our website. All case packs ship in quantities of 5 except UCX which contains 7 per case, and MI. N that ships 10 per case.

GRAVY WALL SCONCE

Display product dimensions:	L-5", H-5", D-4"
Net weight (Lamp only):	1.9 lb.
Product packaging dimensions:	L-6.47", W-7.17", H-3.62"
Packed weight (Lamp+Packaging):	2.2 lb.
Ship via:	UPS, TRK
Safety rating:	UL, CUL
Warranty:	5 years

Lumens:	300
Energy Consumption:	5.5
Lumens/Watt:	55
Voltage:	100-240V
GRW-S-???-???-HW	$250
GRW-S-???-???-PI	$200

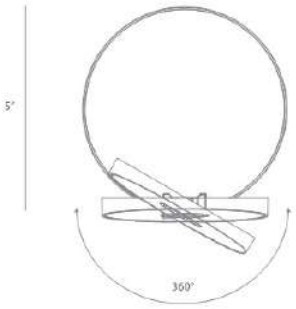

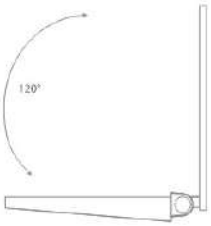

SOBRE LED TASK LIGHT

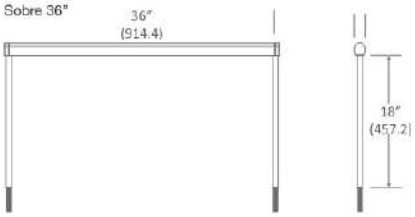

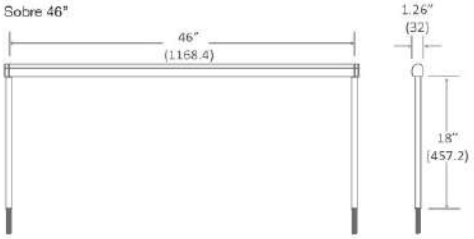

Specs

Ship via: UPS, TRK
Safety rating: UL, CUL
Warranty: 5 years
Lumens: 525, 725
Lux at 18": 936
Energy Consumption: 11, 14
Lumens/Watt: 48, 52
Footcandles at 18": 87
Voltage: 100-240V

Model #	Luminaire Length	List price
SF1-30-??-???-YYY-ZZZ	36"	$354.00
SF1-40-??-???-YYY-ZZZ	46"	$388.00
SF1-60-??-???-YYY-ZZZ	2 x 36"	$625.00
SF1-80-??-???-YYY-ZZZ	2 x 46"	$705.00
SF1-90-??-???-YYY-ZZZ	3 x 56"	$908.00
Options:		
YYY = THR		+$0
YYY = 2CF		+$100
ZZZ = (blank)		+$0
ZZZ = ODC		+$42

THR indicates "Through Table Mount"
2CF indicates "Fixed 2-piece Clamp Mount"
ODC indicates "Occupancy Sensor & Dimmer Control"
**fixture without ODC option is always on when plugged in*

Prices are FOB Los Angeles and are listed in U.S. Currency. Prices effective as of the date of this printing and are subject to change. The double ?? in the SKU number indicates the light code WD (Warm Diffused) or CD (Cool Diffused). Diffused version NOT offered on Equo desk & floor lamps- use W or C only. The triple ??? indicates the 3-digit finish code. The light codes and the finish codes can be found in the product brochure or on our website. All case packs ship in quantities of 5 except UCX which contains 7 per case, and Mr. N that ships 10 per case.

UCX LED UNDERCABINET LIGHT

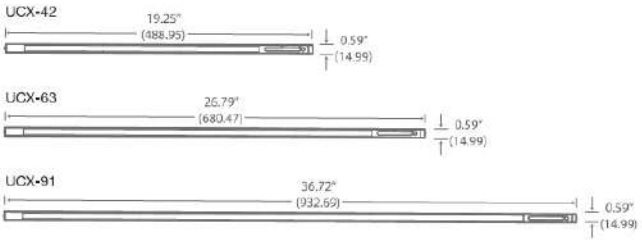

Model #	Luminaire Length	List price
UCX-42-??-???-1PK	19.25"	$248.00
UCX-42-??-???-2PK	2 x 19.25"	$488.00
UCX-42-??-???-3PK	3 x 19.25"	$740.00
UCX-42-??-???-4PK	4 x 19.25"	$980.00
UCX-63-??-???-1PK	26.79"	$322.00
UCX-63-??-???-2PK	2 x 26.79"	$648.00
UCX-63-??-???-3PK	3 x 26.79"	$962.00
UCX-91-??-???-1PK	36.72"	$422.00
UCX-91-??-???-2PK	2 x 36.72"	$848.00

**multi-packs come with 30" daisy-chain cables and a power supply*

Specs

Ship via: UPS, TRK
Safety rating: UL, CUL
Warranty: 5 years
Lumens: 475, 760, 1193
Lux at 18": 861, 1281, 1539
Energy Consumption: 11, 16, 23
Lumens/Watt: 48, 47, 48
Footcandles at 18": 80, 119, 143
Voltage: 100-240V

UCX Accessories

P7-03-OCC01A-???	Occupancy Sensor for UCX series	$50.00
P9-240100A-2-US	Standard power supply (24V, 1A, right-angle plug)	$23.00
P9-240200A-2-US	Large power supply (24V, 2A, right-angle plug)	$35.00
P9-240300A-2-US	Special power supply (24V, 3A, right-angle plug)	$55.00
P6-10-D3096A-1	Daisy Chain Cord (30", straight plug)	$15.00
P6-10-D1296A-1	Daisy Chain Cord (12", straight plug)	$13.00
P6-10-D0096A-1	Male-to-Male Connector (1")	$10.00
P9-240200A-2-US-CHGO	Large power supply (24V, 2A, right-angle plug with Chicago Code option)	$106.10
P9-240340A-0-HI	Hardwire power supply	$220.00

UCX PRO LED UNDERCABINET LIGHT - *Preliminary Specifications*

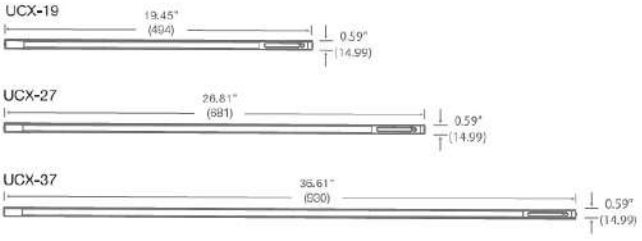

Model #	Luminaire Length	List price
UCX-19-???-1PK	19.45"	TBD
UCX-19-???-2PK	2 x 19.45"	TBD
UCX-19-???-3PK	3 x 19.45"	TBD
UCX-19-???-4PK	4 x 19.45"	TBD
UCX-27-???-1PK	26.81"	TBD
UCX-27-???-2PK	2 x 26.81"	TBD
UCX-27-???-3PK	3 x 26.81"	TBD
UCX-37-???-1PK	36.61"	TBD
UCX-37-???-2PK	2 x 36.61"	TBD

**multi-packs come with 30" daisy-chain cables and a power supply*

Specs

Ship via: UPS, TRK
Safety rating: UL, CUL
Warranty: 5 years
Lumens: 760, 1216, 1672
Energy consumption: 6.4, 10.2, 14
Lumens/watt: 95, 95, 95
Voltage: 100-240V

UCX Pro Accessories

	Occupancy sensor for UCX Pro	TBD
P9-240100A-2-US	Standard power supply (24V, 1A, right-angle plug)	$23.00
P9-240200A-2-US	Large power supply (24V, 2A, right-angle plug)	$35.00
P9-240300A-2-US	Special power supply (24V, 3A, right-angle plug)	$55.00
	Daisy chain cord for UCX Pro	TBD
	Male-to-Male connector for UCX Pro	TBD
P9-240200A-2-US-CHGO	Large power supply (24V, 2A, right-angle plug with Chicago Code option)	$106.10
P9-240340A-0-HI	Hardwire power supply	$220.00
	Wifi module	TBD

Following publication of this brochure, certain changes in product features, options, specifications and the like may have occurred, which would not be included in these pages. Koncept.com is your best source for up-to-date information. Koncept reserves the right to change product specifications at any time without incurring obligations.

ELX-A-U-XXX-DSK	Equo
ELX-A-U-XXX-FLR	Equo Floor
AR3000-UD-YYY-ZZZ	Z-Bar
AR3200-UD-YYY-ZZZ	Z-Bar Slim
AR3100-UD-YYY-ZZZ	Z-Bar Mini
AR5000-UD-YYY-FLR	Z-Bar Floor
AR1000-UD-YYY-ZZZ	Z-Bar Solo
AR1100-UD-YYY-ZZZ	Z-Bar Solo Mini
AR2001-YYY-ZZZ	Mosso Pro
AR2001-YYY-FLR	Mosso Pro Floor
UCX-QQ-UD-YYY	UCX
UCX-SS-XXX	UCX Pro
SF1-JJ-UD-YYY-ZZZ	Sobre
MC1-WHT-FLR	Tono
GR1-W-WNR-MWT-DSK	Gravy (Walnut/Matte White)
GR1-W-WOB-MWT-DSK	Gravy (White Oak/Matte White)
GR1-W-MPW-SIL-DSK	Gravy (Maple/Silver)
GRW-S-XXX-WWW-RR	Gravy Wall Sconce
NL1-S-YYY-DSK	Mr. n
L7-YYY-DSK	Lady7
L7-YYY-FLR	Lady7 Floor
MT-02-D001-YYY	Z-Bar / Z-Bar Slim / Z-Bar Solo / Mosso Pro Base
MT-02-D002-YYY	Z-Bar Mini / Z-Bar Solo Mini Base
MT-02-D003-YYY	Z-Bar / Z-Bar Slim / Z-Bar Solo / Mosso Pro Wireless Charging Base
MT-03-F002-YYY	Z-Bar Floor Base
MT-05-D001-XXX	Equo Desk Base
MT-06-F001-XXX	Equo Floor Base
MT01C3-YYY	Clamp (One-Piece)
MT-01-C004-YYY	Two-Piece Clamp
MT01W1-YYY	Wall Mount
MT-01-S004-YYY	Slatwall Mount
MT-01-G001	Grommet Mount
MT01T1	Through-Table Mount
MT-13-C002-YYY	Sobre Tiltable Two-Piece Clamp Mount
P7-01-OCC01A-YYY	Occupancy Sensor for AR series (Z-Bar & Mosso Pro)
P7-02-OCC01A-XXX	Occupancy Sensor for ELX-A series (Equo)
P7-03-OCC01A-YYY	Occupancy Sensor for UCX series
P6-10-D0096A-1	Male-to-Male Connector (1")
P6-10-D3096A-1	Daisy Chain Cord (30", straight plug)
P6-10-D1296A-1	Daisy Chain Cord (12", straight plug)
P9-240050A-1-US	Transformer (24 V, 0.5 A, straight plug) for AR and ELX series
P9-240100A-2-US	Standard Transformer (24 V, 2 A, right-angle plug)
P9-240200A-2-US	Large Transformer (24 V, 2 A, right-angle plug)
P9-240340A-0-HI	Hardwire Transformer

Legend

XXX = BLK, SIL, ORG, CRM*, MWT**
BLK = Black
SIL = Silver
ORG*** = Orange***
CRM* = Chrome*
MWT = Matte White**

*For Equo (warm light model) and Gravy wall sconce only
**For Gravy wall sconce only
***For Equo only

YYY= MBK, SIL, WHT*, RED**, ORG**, BLU**, GRN**, PUR**, MRD***, MWT***
MBK = Metallic Black
SIL = Silver
WHT* = White*
RED** = Red**
PUR** = Purple**
ORG** = Orange**
BLU** = Blue**
GRN** = Green**
MRD*** = Matte Red***
MWT*** = Matte White***

*For Z-Bar Mini (warm light model), UCX, Sobre, Mosso Pro only.
**For Z-Bar Mini (warm light model) only.
Not available on mounts & occupancy sensors for AR & UCX series.
***For Lady 7 only

ZZZ= DSK*, CLP*, 2CL, SLT*, WAL*, GRM*, THR
DSK* = Desk Base
CLP* = Clamp (One-Piece)
2CL* = Two-Piece Clamp
SLT* = Slatwall Mount
WAL* = Wall Mount
GRM* = Grommet Mount
THR = Through-Table Mount
QCB* = Wireless Charging Base
2CF** = Fixed Two-Piece Clamp

*Not available on Sobre.
**For Sobre only.

U = C, W
C = Cool Light
W = Warm Light

QQ = 42, 63, 91
42 = 42 LEDs (for 24" cabinet)
63 = 63 LEDs (for 36" cabinet)
91 = 91 LEDs (for 48" cabinet)

JJ = 30, 40, 60, 80, 90
30 = 3' Combo (42 LEDs)
40 = 4' Combo (56 LEDs)
60 = 6' Combo (84 LEDs)
80 = 8' Combo (112 LEDs)
90 = 9' Combo (126 LEDs)

RR = HW, PI
HW = Hardwire
PI = Plug-in

WWW = MWT, SIL, CRM, MBK, OWT, WOK, MOR, MRD, MYW, MHP, MBL, MGN, OXF, HDF, AZF
MWT = Matte White
SIL = Silver
CRM = Chrome
MBK = Metallic Black
OWT = Oiled Walnut
WOK = White Oak
MOR = Matte Orange
MRD = Matte Red
MYW = Matte Yellow
MHP = Matte Hot Pink
MBL = Matte Blue
MGN = Matte Green
OXF = Oxford (Felt)
HDF = Honeydew (Felt)
AZF = Azure (Felt)

SS = 19, 27, 37
19 = 19" length
27 = 27" length
37 = 37" length

Following publication of this brochure, certain changes in product features, options, specifications and the like may have occurred, which would not be included in these pages. Koncept.com is your best source for up-to-date information. Koncept reserves the right to change product specifications at any time without incurring obligations.

KONCEPT
t: 323 261 8999 f: 323 261 8998
sales@koncept.com

All products are TAA compliant.

© 2016 Koncept Technologies Inc. All rights reserved.